TEWE





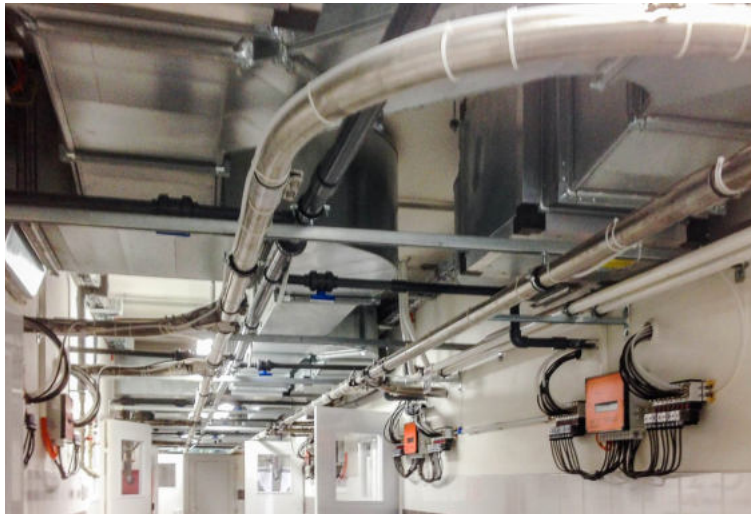

# AIRFEED

ONE SYSTEM TO FEED THEM ALL

# AIRFEED product line

**AIRFEED is a professional and fully automated feeding system providing individual feed valves as well as complete feeding troughs by means of a pneumatic conveyor system. The quantity and type of feed components are programmed in advance following the individual needs of the animals. The feed is quickly distributed by use of a solid and long-lasting pipe system.**



# Example of an AIRFEED installation at a pig farm.

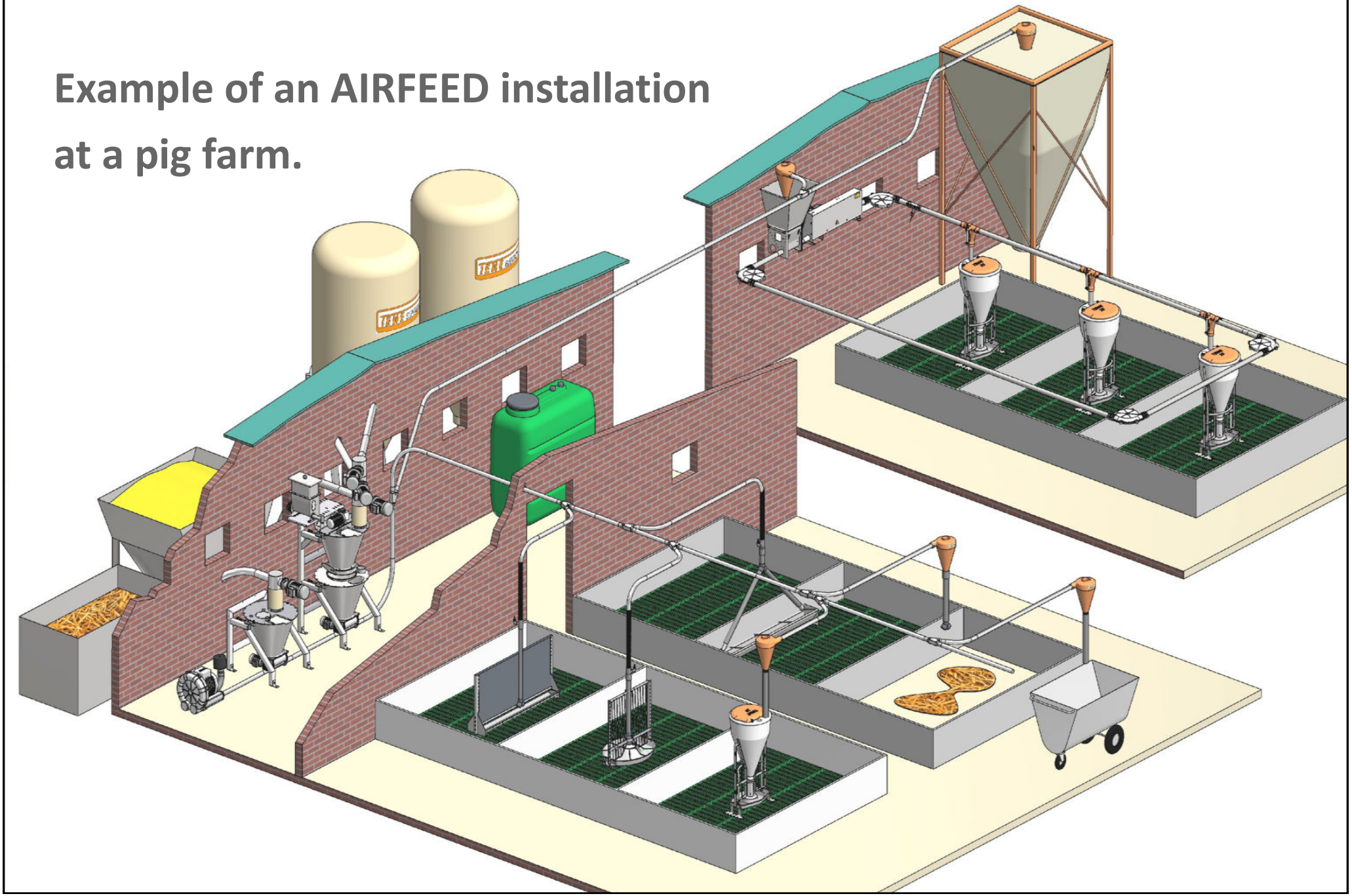

# KONUS mixer





# Mixing stations

**Modular construction opens up a variety of installation possibilities and allows for customized configurations adapted to number and nature of the animals to be fed.**



**Mono**
5000.1110



**Mono XL**
5000.1101



**Duo**
5000.1106



**Duo XL**
5000.1108



**Straw**
5000.1107



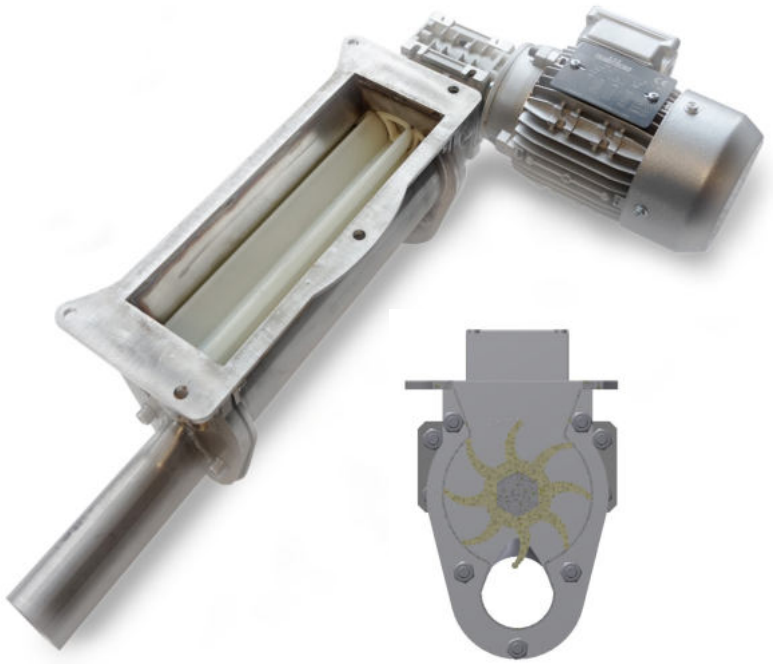

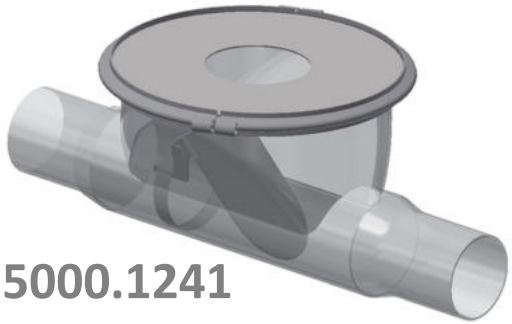

5000.1241

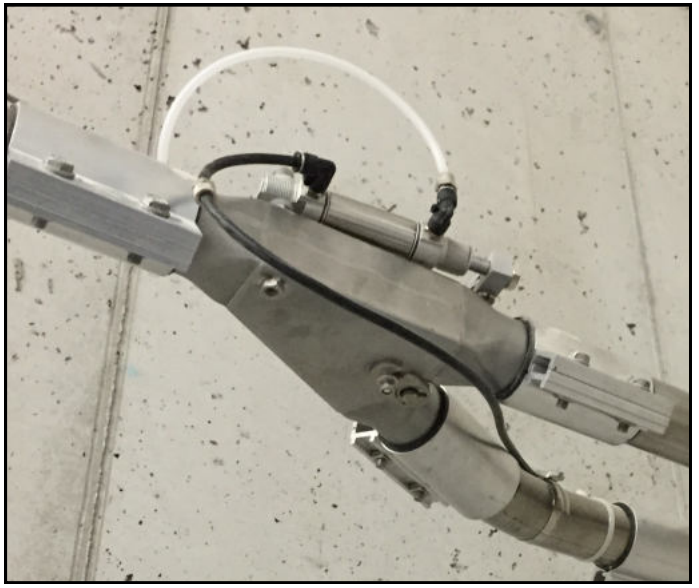

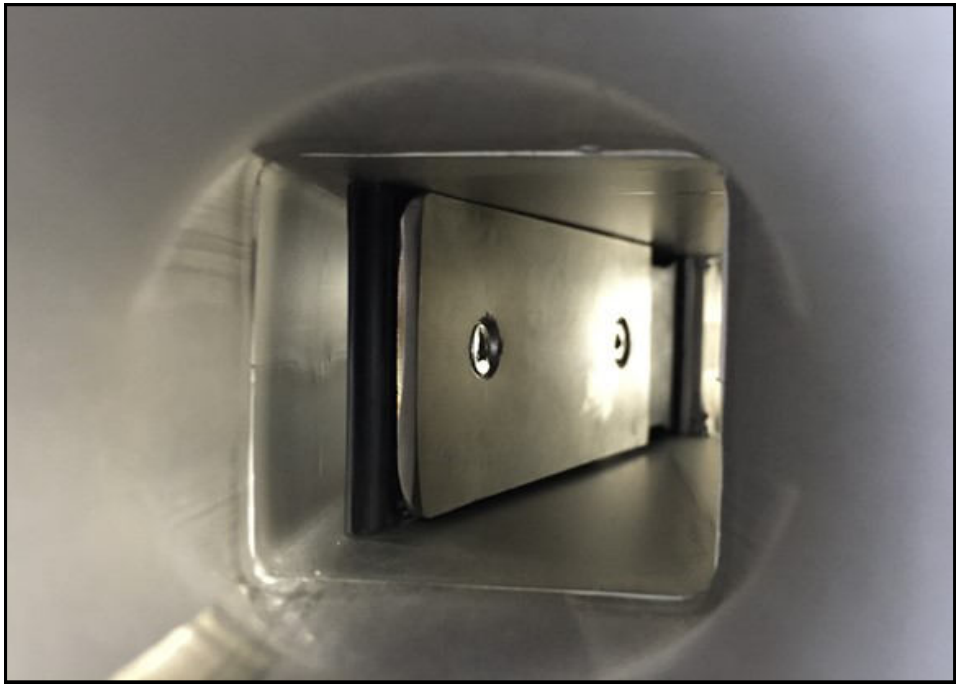



5000.1206

# Feed conveyor line



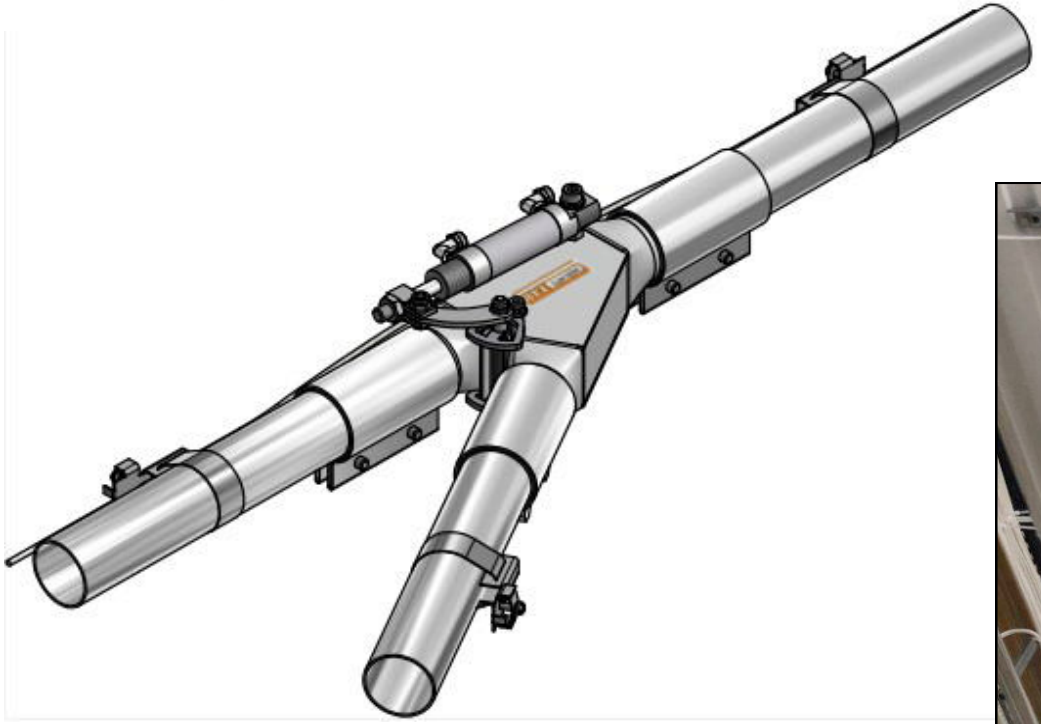





# Dry feeding of piglets

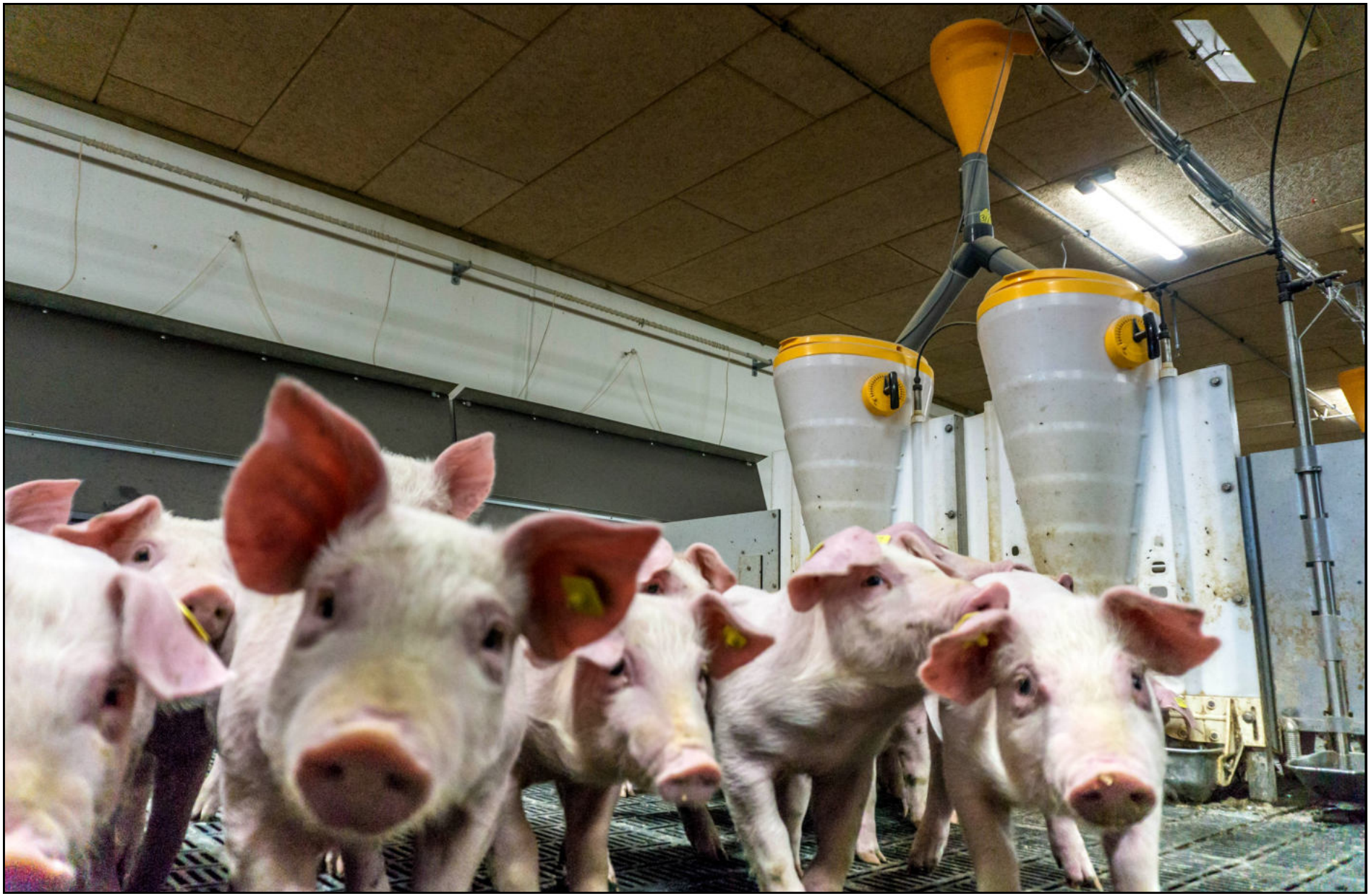



Support for sensors



Cyclon equipped with wear-resistant steel inlay

# Liquid feeding of piglets

## Small portions and fresh feed for healthy and fast-growing piglets



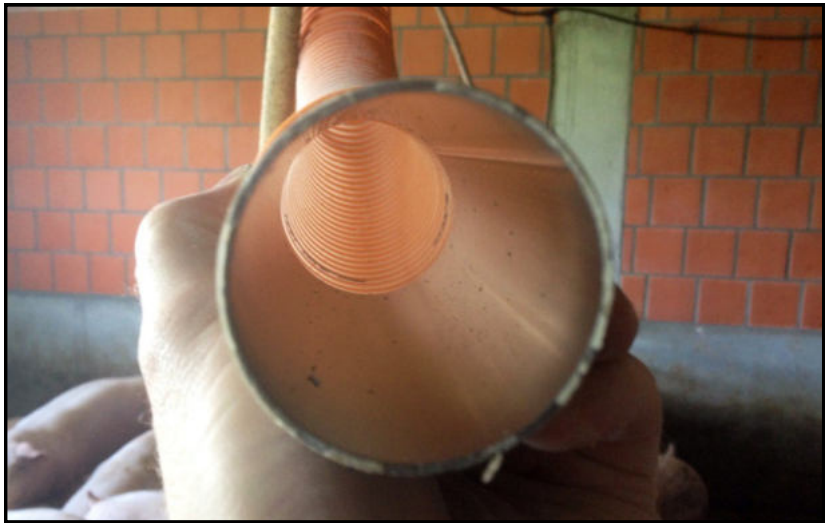



… before …

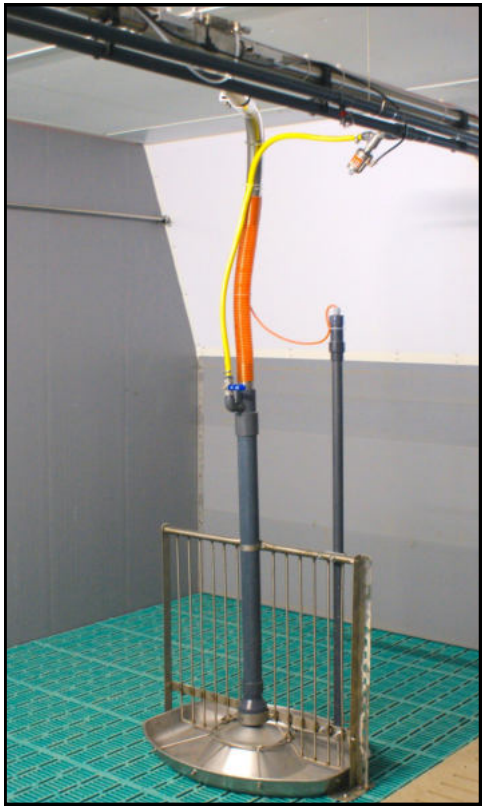



… after …



# Liquid feeding of fattening pigs



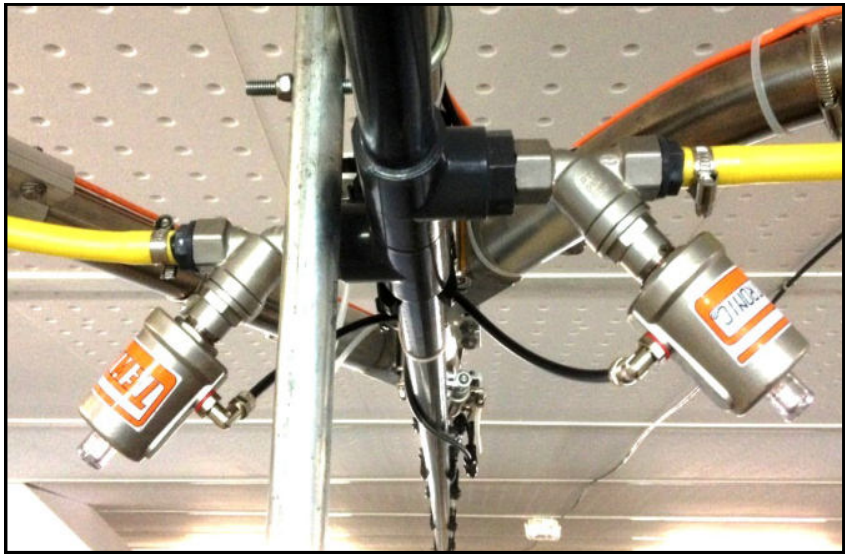





# Liquid feeding of sows









# Organic livestock farms




VENTIL 1 - 8
SENSOR 1 - 8
TEWE
CAN - S / V - BOX

# Straw feeding for animal welfare




TEWE







# Use of CCM









# Conveyor system for grinding and mixing units







# ELECTRONICAL CONTROL

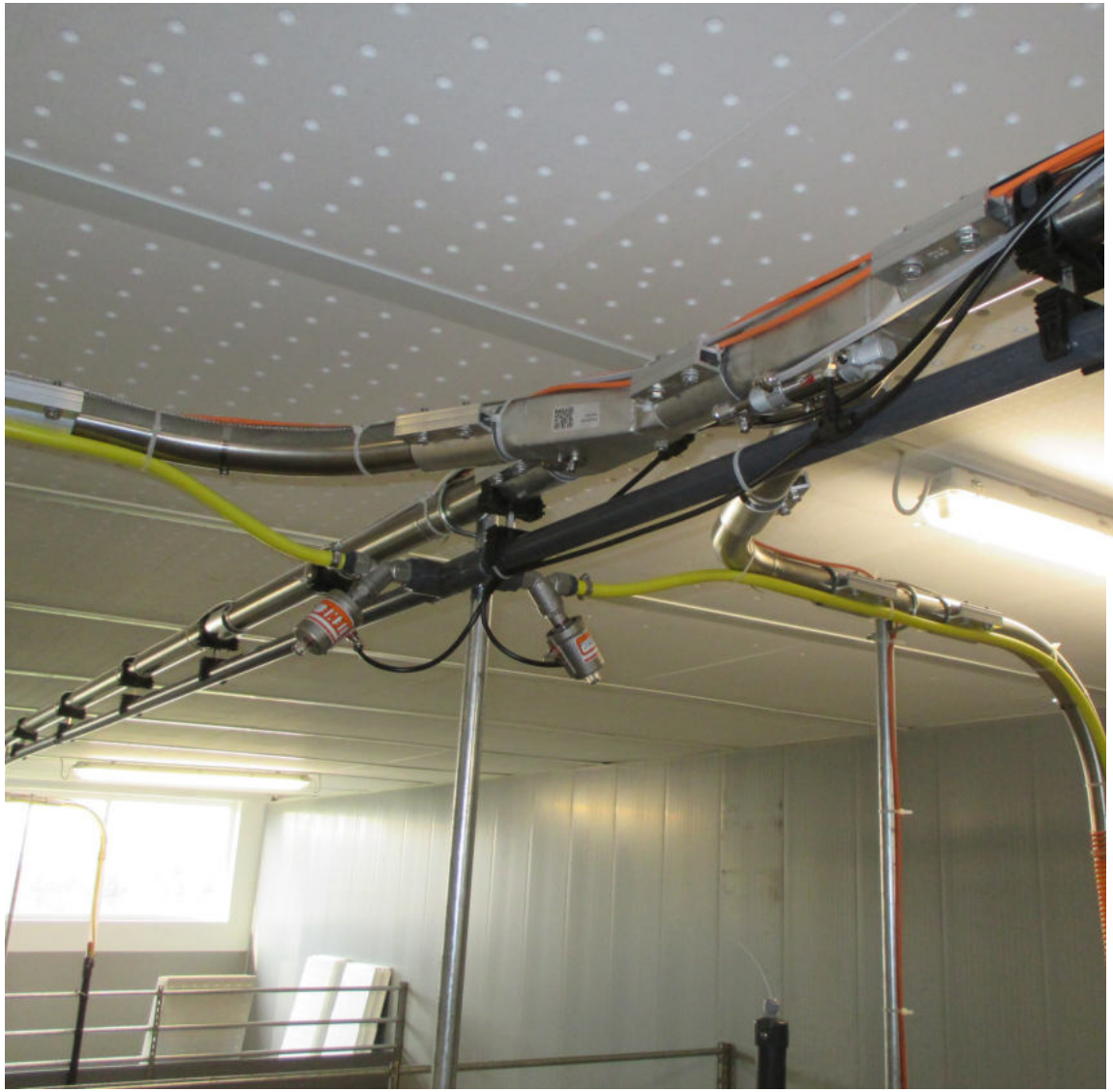





# TEWESTAR HOME

## Structured and clear display of the entire feeding system

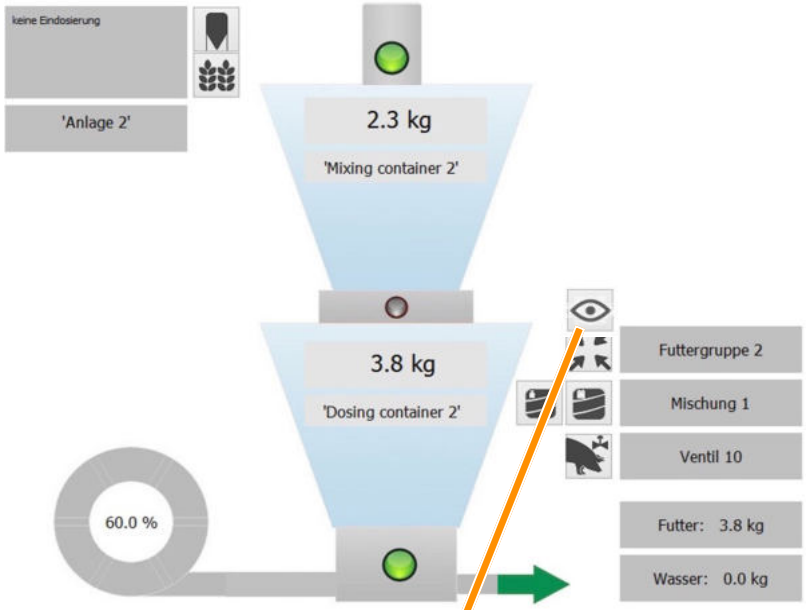


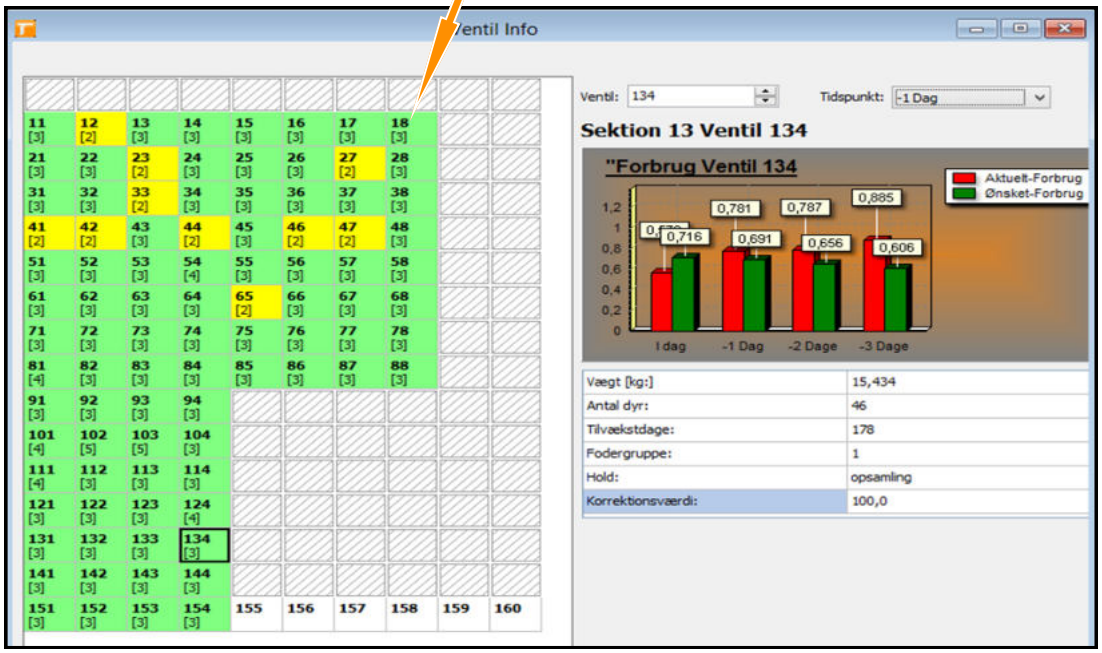


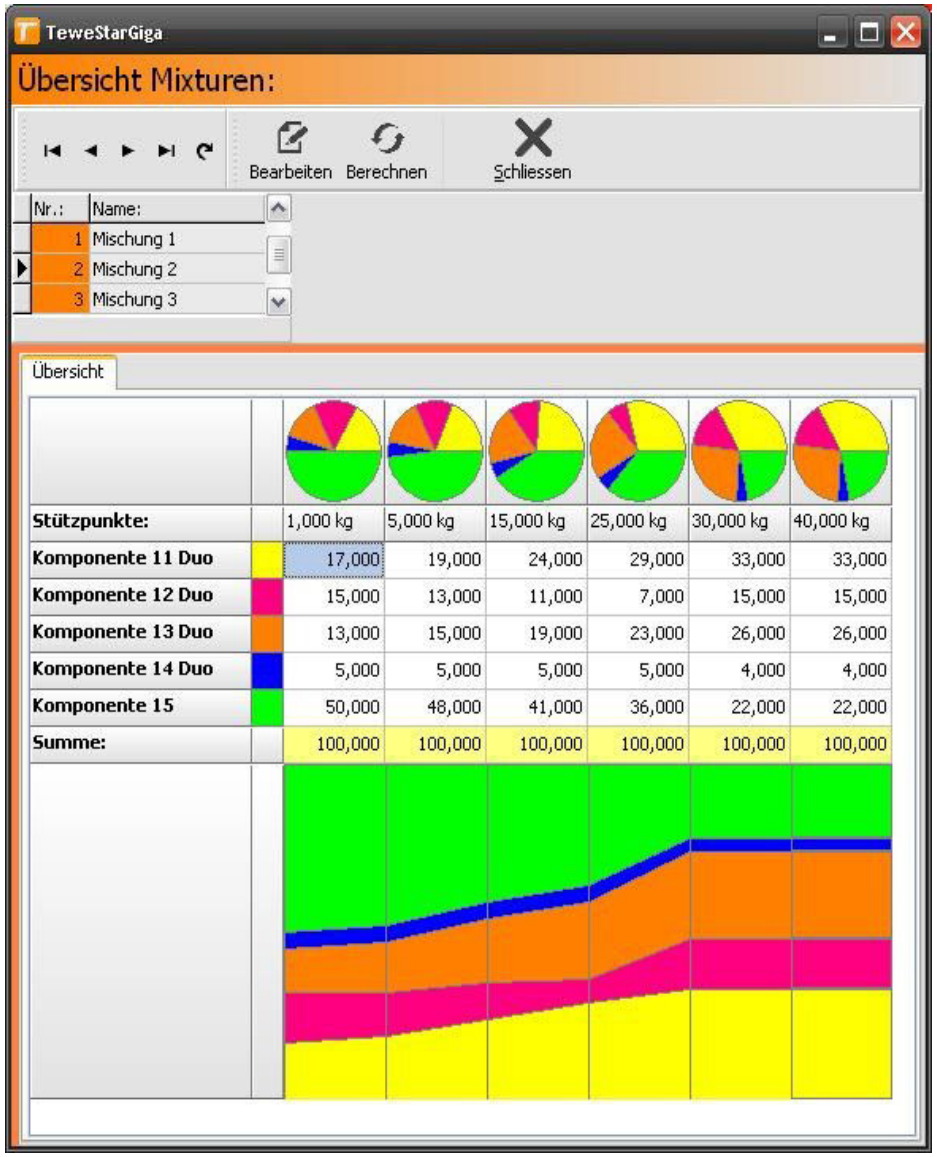

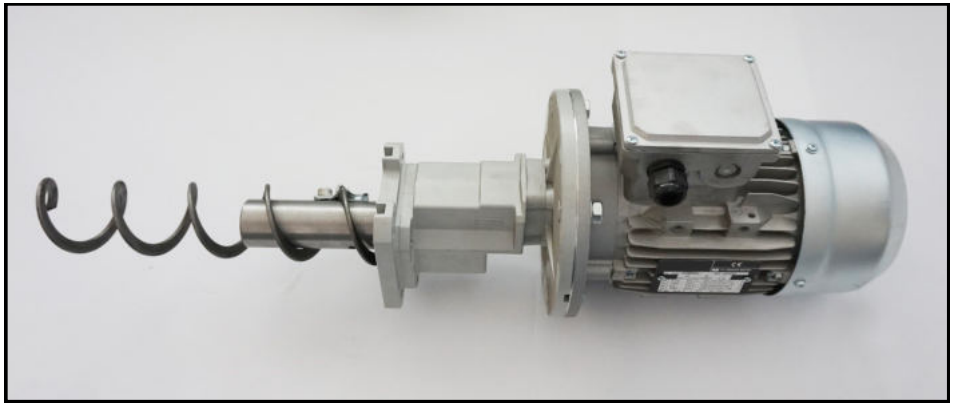





# Spiral Conveying System









| | | | | | | | |
|---|---|---|---|---|---|---|---|
| 60 mm | 1124.0101 | 8111.0022 | 8125.0021 | 1124.0004 | 8348.0022 | 7325.0011 | 1124.0202 |
| 75 mm | 1124.0102 | 8111.0034 | 8125.0023 | 1124.0005 | 8348.0023 | 1124.0391 | 1124.0205 |
| 90 mm | 1124.0100 | 8111.0021 | 8125.0027 | 1124.0006 | 8348.0024 | 1124.0392 | 1124.0203 |
| 125 mm | 1124.0103 | 8111.0035 | 8125.0030 | 1124.0007 | 8348.0025 | 1124.0393 | 1124.0204 |



1124.0367



1124.0369

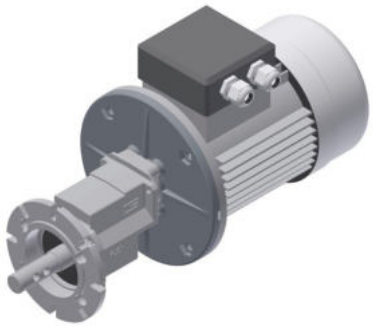

6004.0304 1,10 kW 356 rpm
6004.0303 0,75 kW 356 rpm
6004.0302 0,75 kW 177 rpm
6004.0301 0,75 kW 117 rpm


TEWE ELEKTRONIC
TEWE ELEKTRONIC

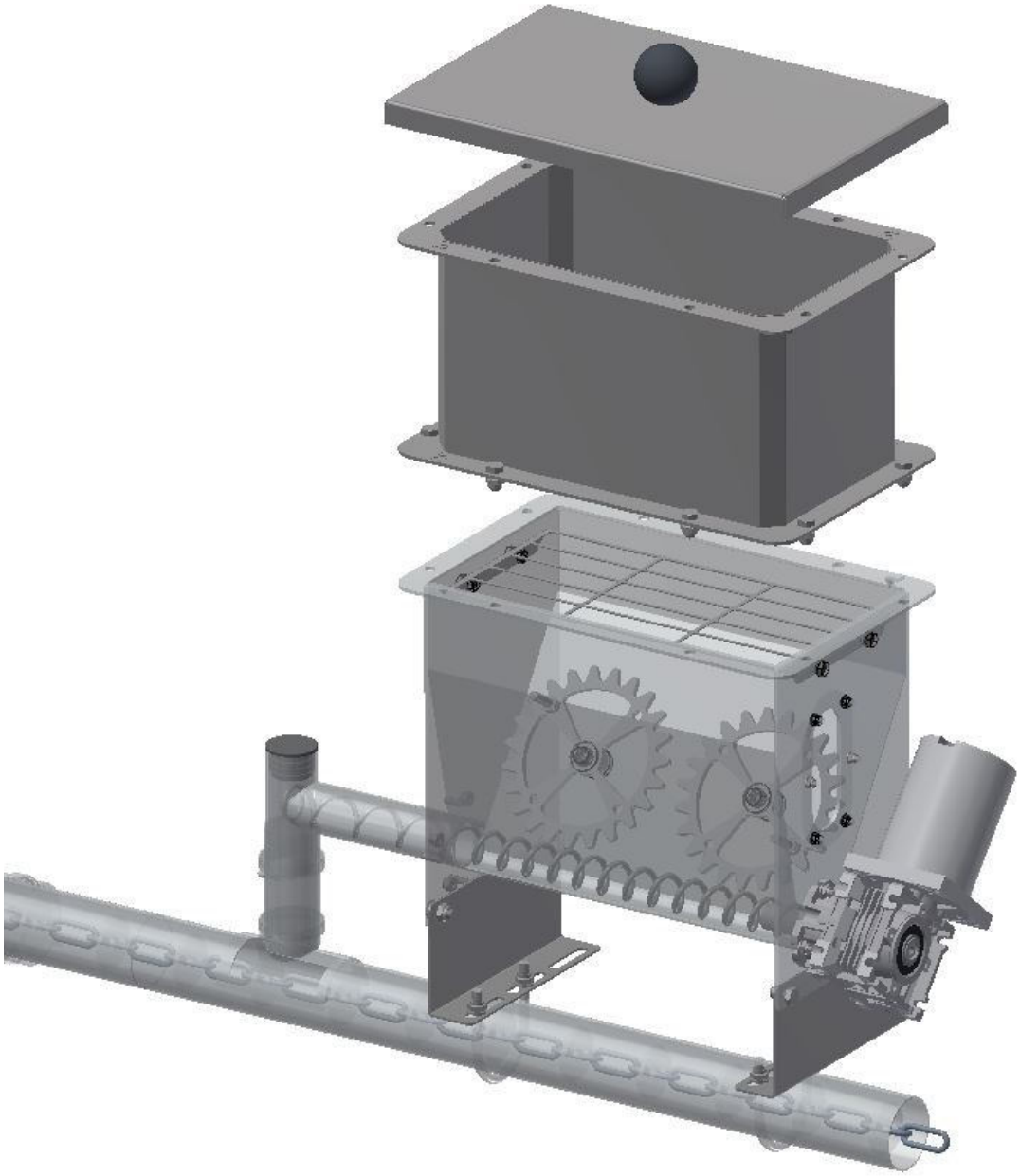

# Microdoser

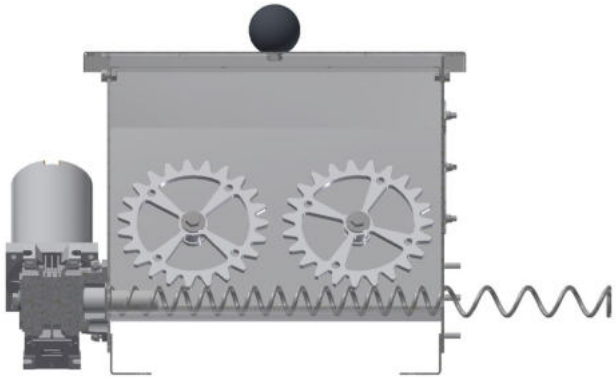

1125.0070



1125.0051



1125.0060




4513.0201





1125.0052



1125.0053



1125.0054



1125.0055



7212.0073



5000.2011

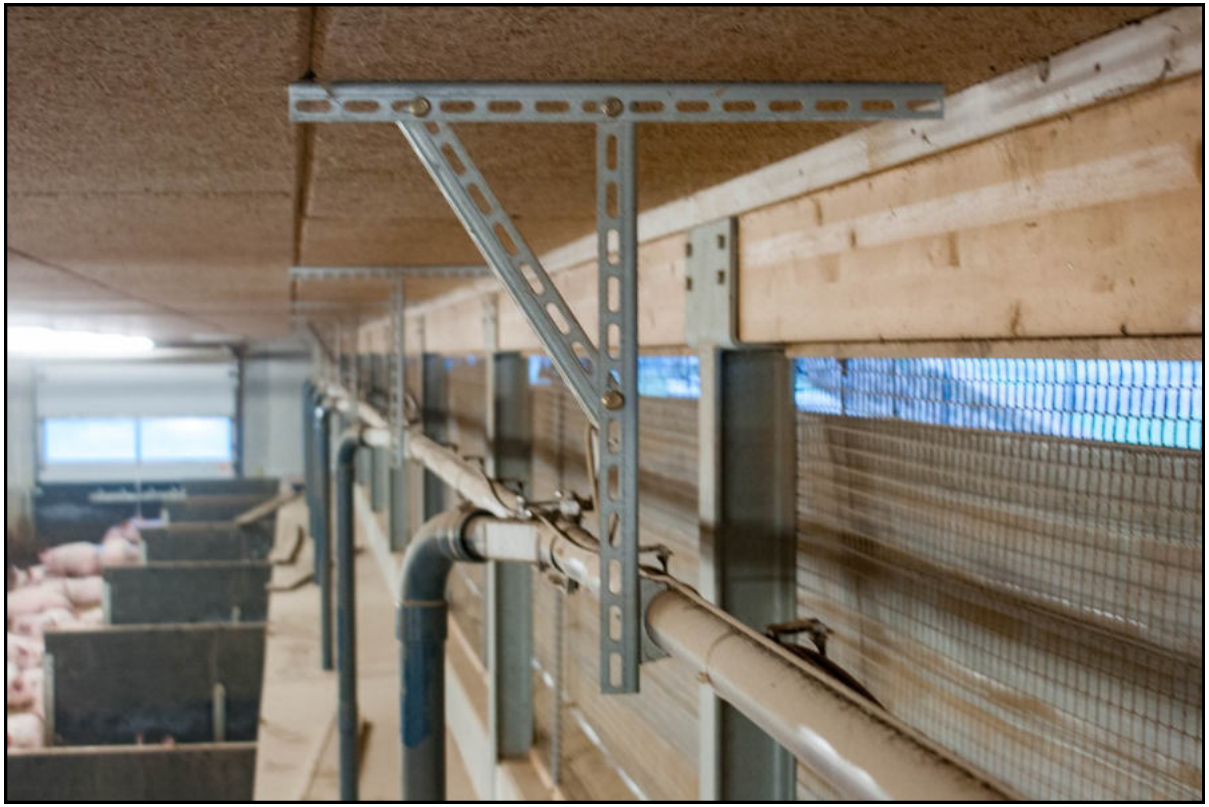

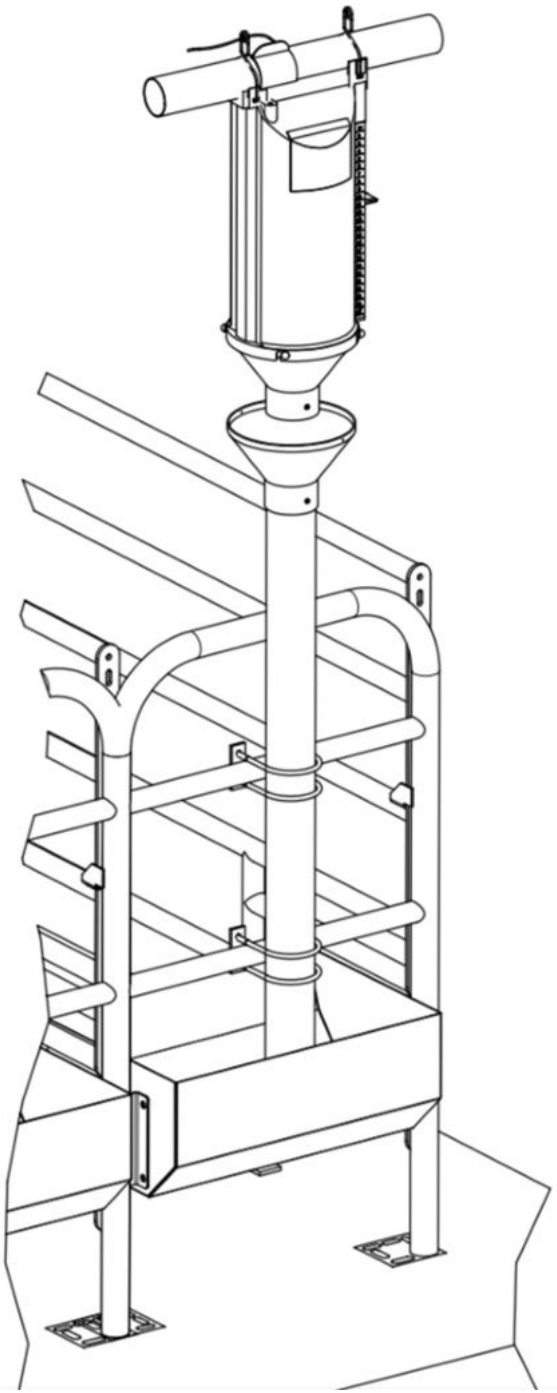

# Fixing material and supports

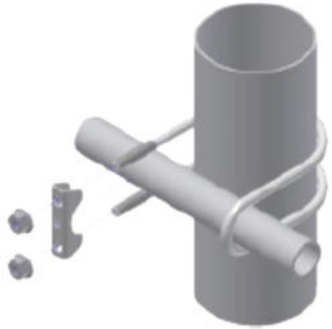

8351.0017 - M8, 1/2" x 80 mm

8351.0016 - M8, 3/4" x 80 mm

8351.0015 - M8, 1" x 80 mm

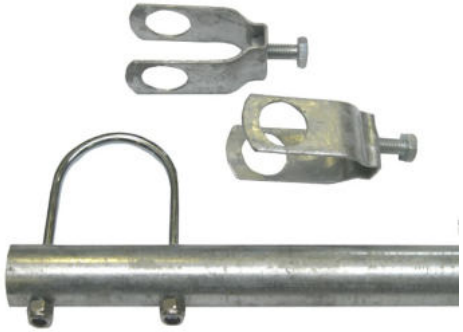

7212.0005 Ø 60 mm x 3/4" x L=1,30

7212.0046 Ø 60 mm x 3/4" x L=1,50

7212.0006 Ø 60 mm x 1" x L=1,30

7212.0047 Ø 60 mm x 1" x L=1,50



8348.0020 Ø 50 mm

8348.0021 Ø 60 mm

8348.0022 Ø 70 mm

8348.0023 Ø 83 mm

8348.0024 Ø 102 mm

8348.0025 Ø 138 mm

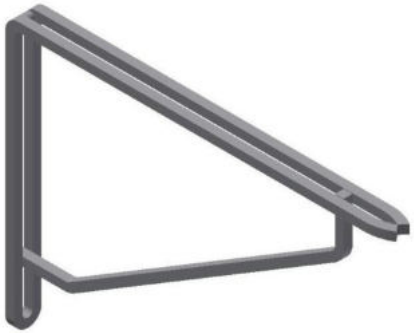

7212.0051 250 x 350mm

7212.0052 350 x 450mm

TEWE Elektronic GmbH

Karl-Benz-Straße 17 · 48691 Vreden/Germany
Phone: +49 (0) 25 64 / 93 55 0
Fax: +49 (0) 25 64 / 33 71 5
info@tewe.com
www.tewe.com

Version 1.8 09/09/2023