TEWE







BATCHFEED

BATCH, EASYMIX AND MULTIPHASE FEEDING

Batchfeed product line

"BATCH FEED" stands for a professional and fully automatic dry feeding system that supplies single feeders or volume dispensers by using a CHAIN FEED conveyor system and automatic valves with individually mixed dry feed portions.

According to the programmed mixture for each feeding place, the exactly measured quantities of the single components are filled into the mixing tank. The precisely prepared feed mixtures are then forwarded to the connected feeders or volume dispensers. For the feed distribution our "Batchfeed" system uses the same hardware components as to be used for the TEWE Chainfeed system.

TEWE batch feeding sytem = maximum efficiency for professional livestock



Can Bus Controller

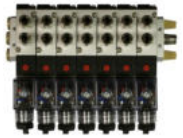

Pneumatic acutators

Switch cabinet



Controller

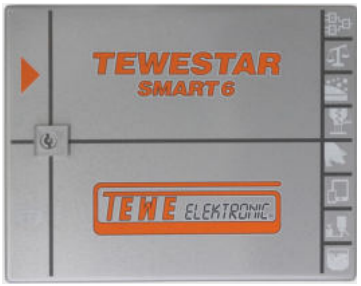

Display

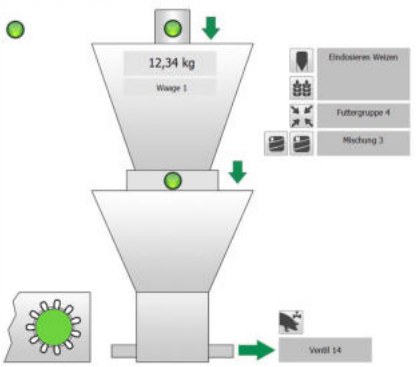

Safety sensor

VT60 Automatic valves

Pipe

Corner

Feed components

Feeder

Feeder sensor

Batch mixer

Chain



Load cell

Can Bus weighing



Feeding machine

Hopper


TEWE ELEKTRONIC
GAOSAI
威海高赛

Mixing stations

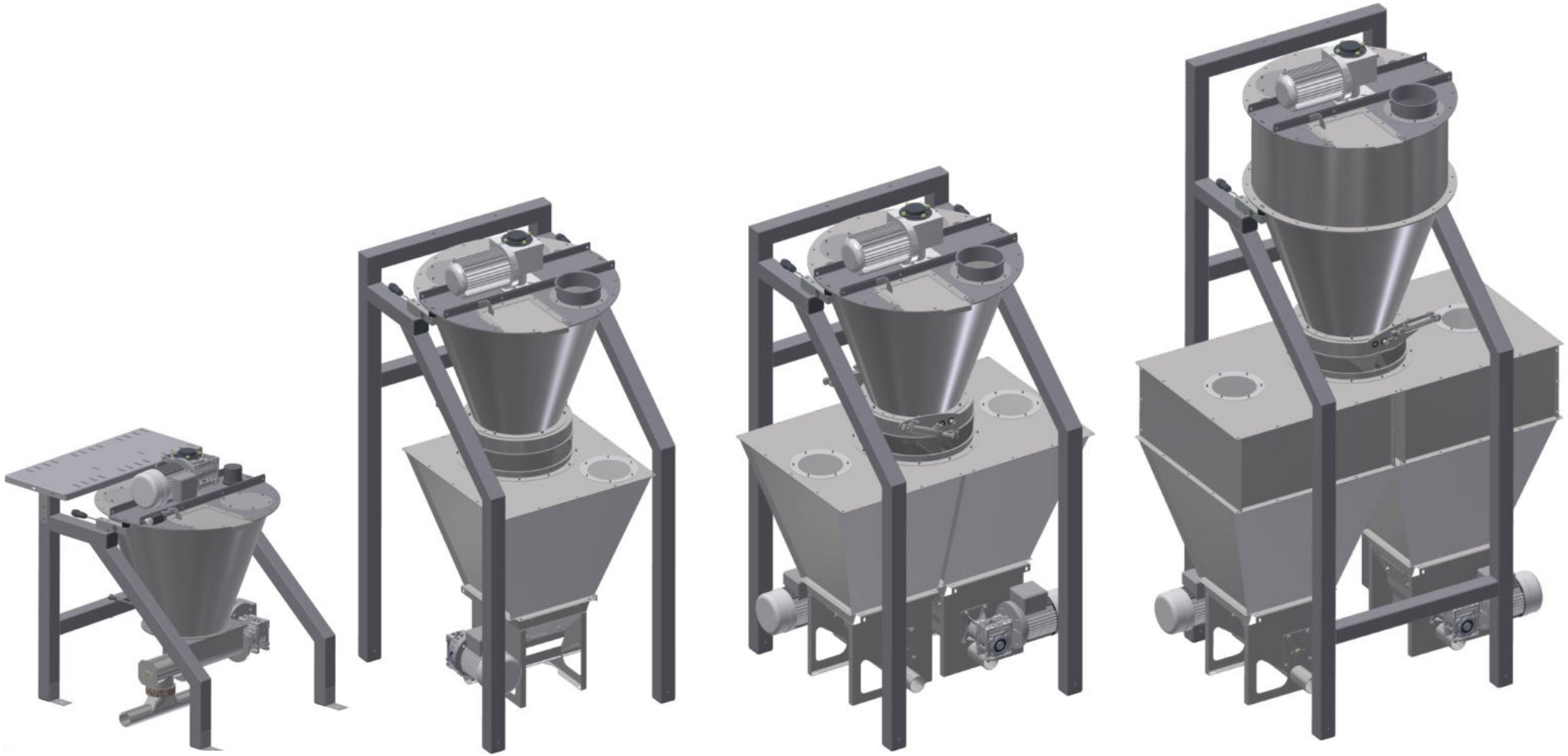

Mini station
1712.0100

Duo station
1712.0200

Duo station 2
1712.0250

Duo station 2 XL
1712.0300

Double prized innovation system





KONUS MIXER







2981.5700 1-circuit

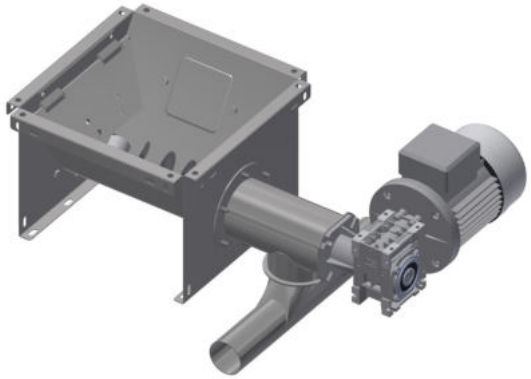

2981.5705 Motor drive

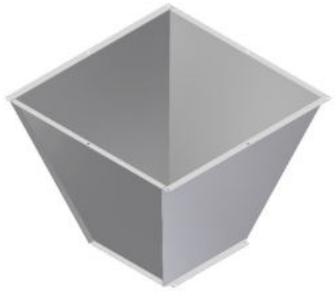

2981.5745 100 l



2981.57467 70 L

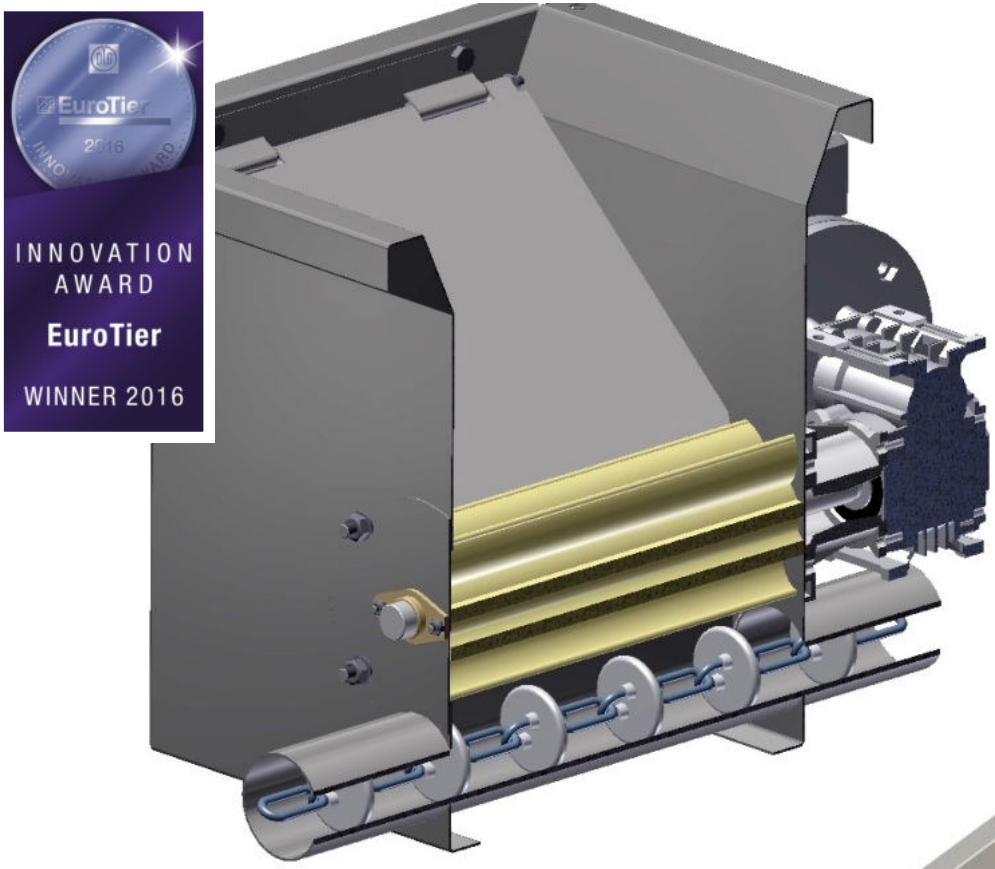

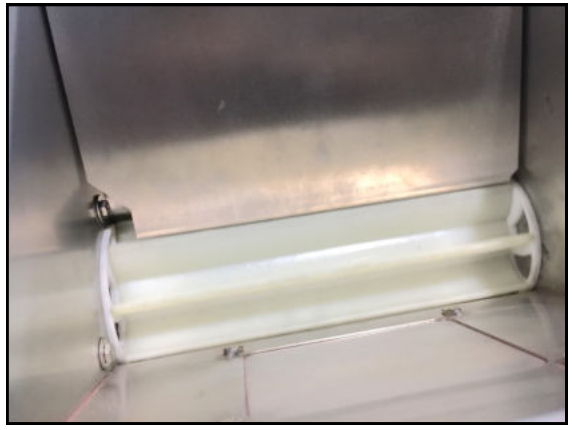

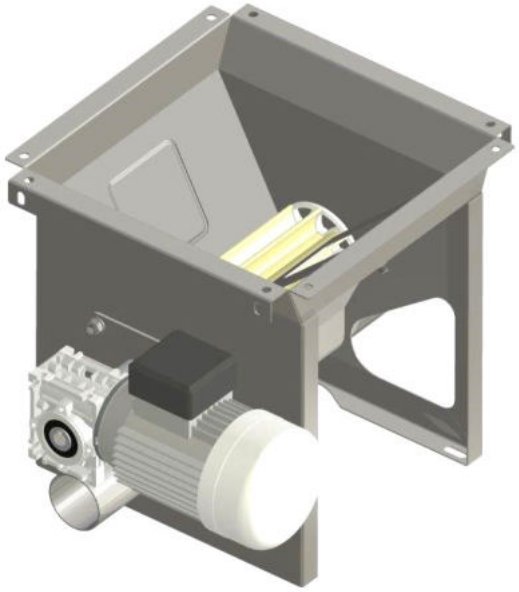

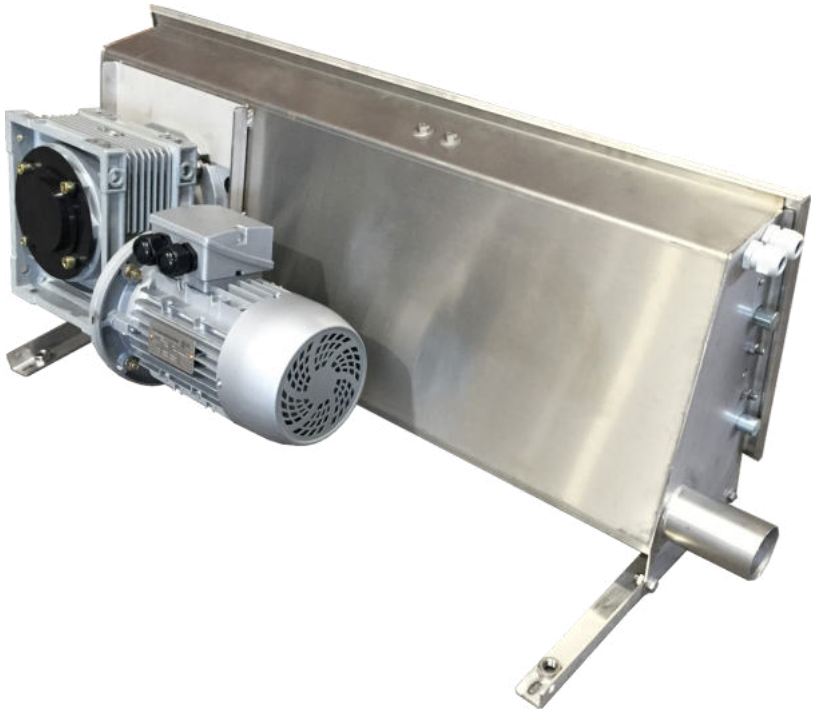






INNOVATION
EuroTier
2016

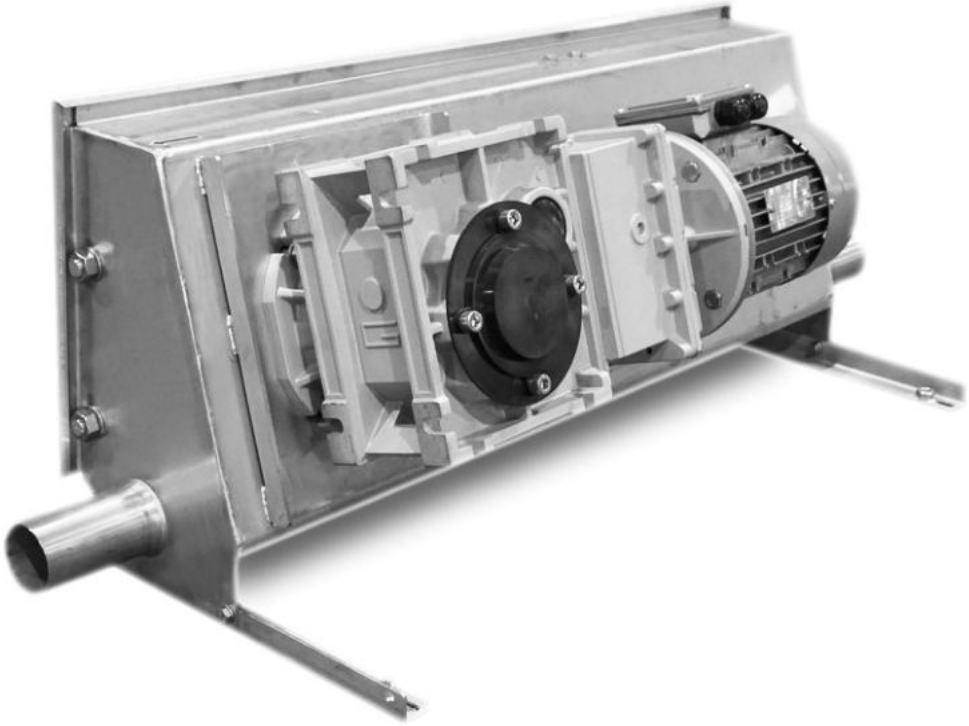

Feeding machine

Standard

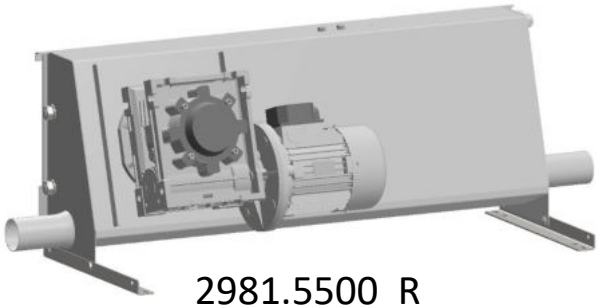

2981.5500 R

2981.5501 L



Eco - plus

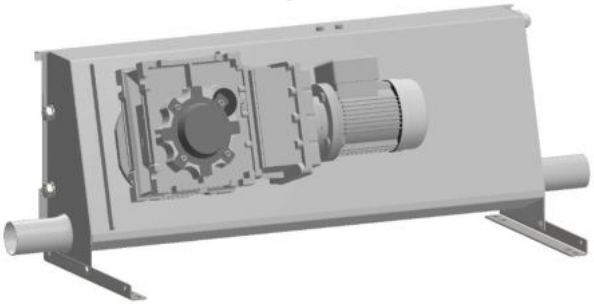

More than 6 hours/day runtime

Safe 25% power consumption



2981.5510



2981.5521

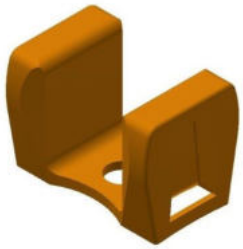

2981.5523



2981.5520



2984.0038



2981.5540

Feed chains

	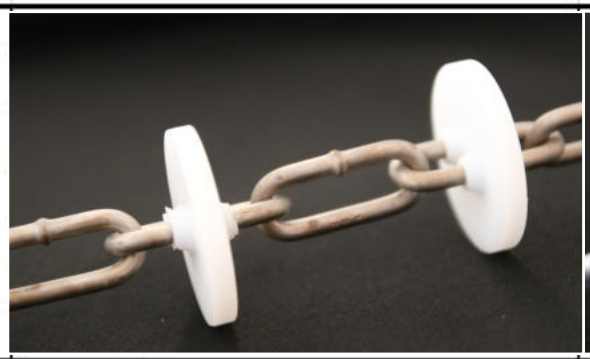	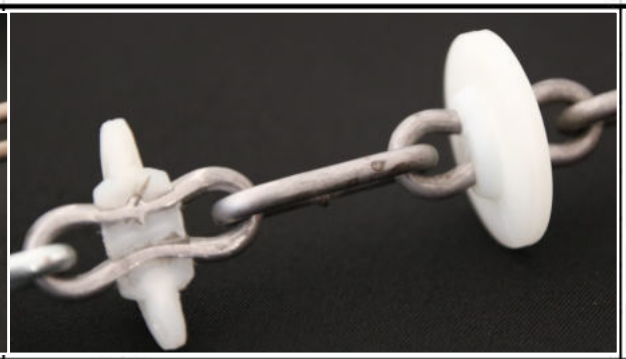	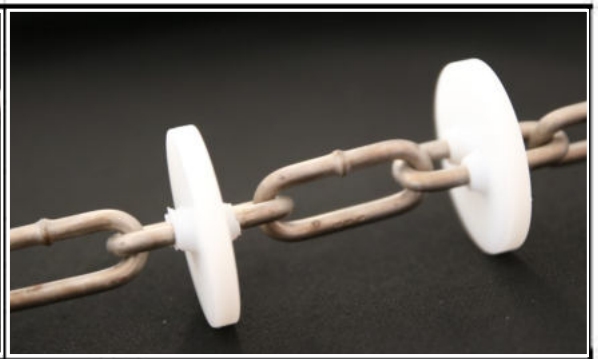
Product line	**Long life M** 	**Long life T** 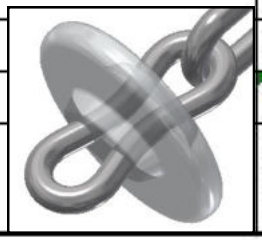	**Long life M** 
Ø Disk	**44 mm**	43 mm	48 mm
Part number	**2981.5102**	2981.5098	2981.5101
Application	Pellets + flour	Pellets + Flour	Batch Feed Pellets + Flour

2981.5088



2981.0028 (SS AISI 304)



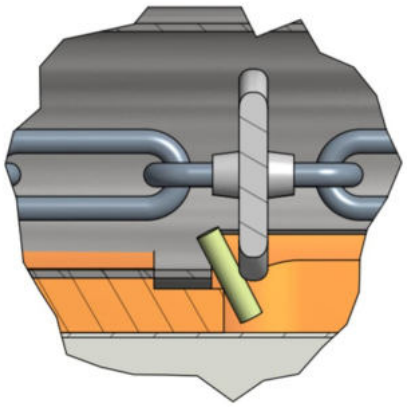

VT60 - Automatic drop valves

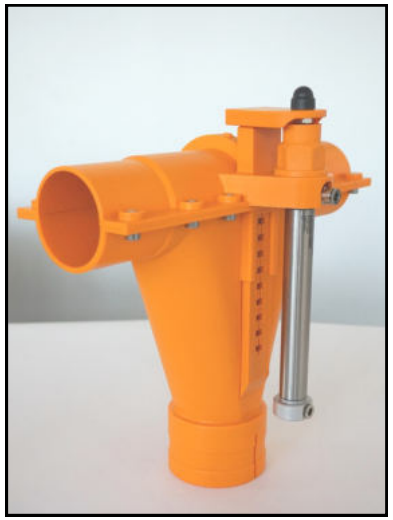

2805.0040



2805.0010



2805.0025

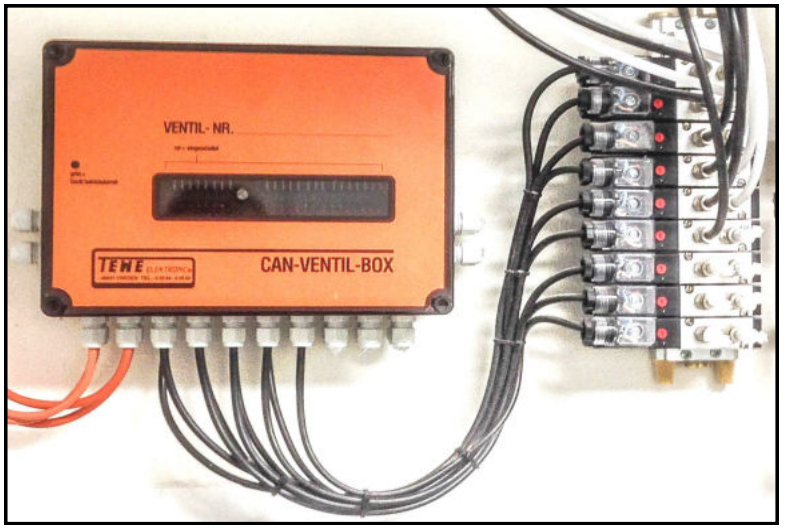





Multiphase feeding with sub-systems









Batch feeding





			100,6	100,6	101	100,1	100	100,1	100,1
Komp	Stützpunkt		1	14	15	21	26	32	69
1	Soya					9	9	24,3	25
2	Hvede		62	62	62	54,3	54,3	42,3	41,6
3	Big		4	4	5	16	16	25	25
4	Fiskmel		5	5	5				
5	Danstart25		25	25	25				
6	Gardmix 09					7,2	7,2		
7	Gardmix 10							5	5
8	Vilosoy					10,6	10,5	1	1
9	Olie		4	4	4	3	3	2,5	2,5
10	Zynk		0,6	0,6					
	Futterkurve		1	1	1	1	1	1	1



Phase feeding with sub-chain

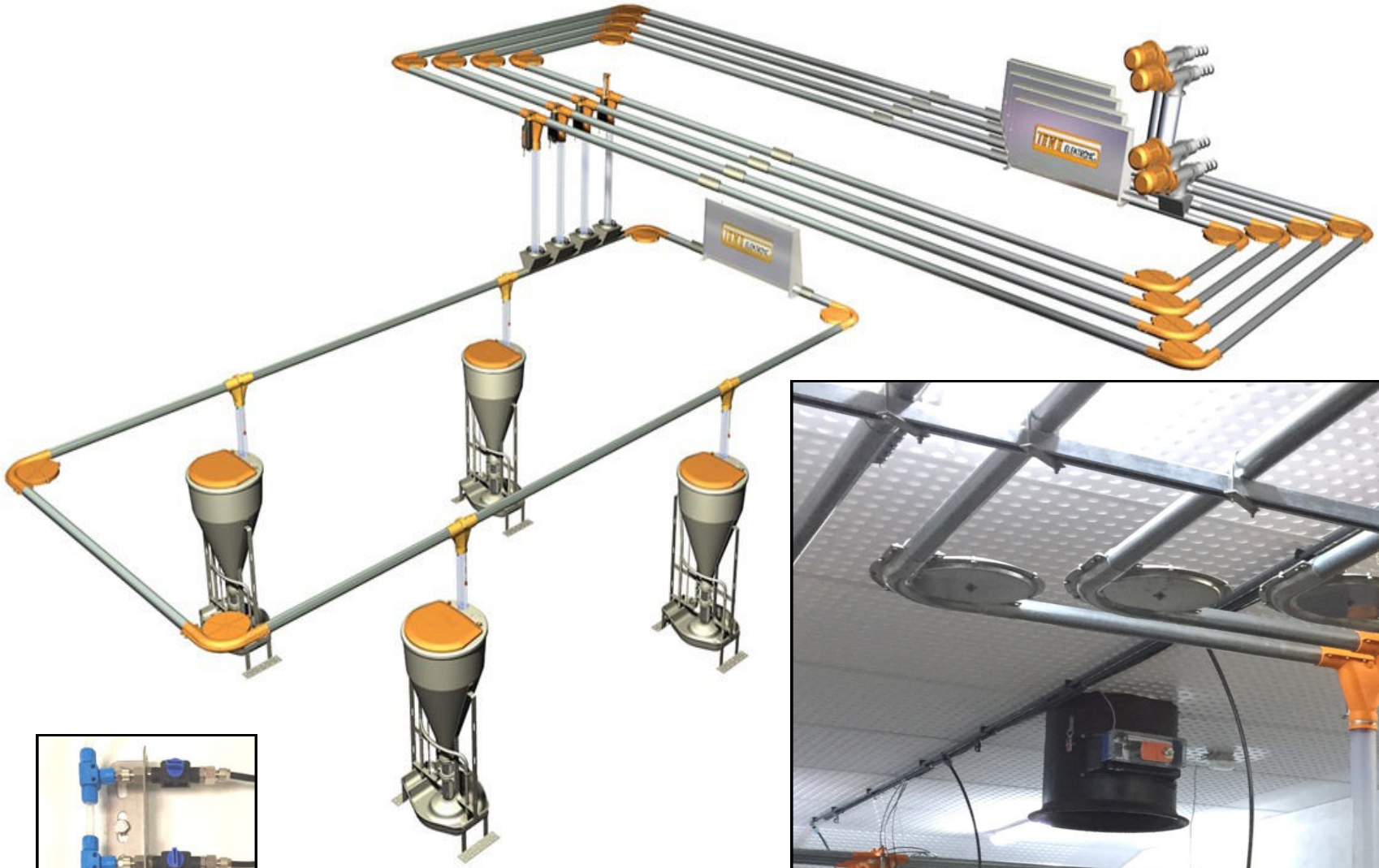

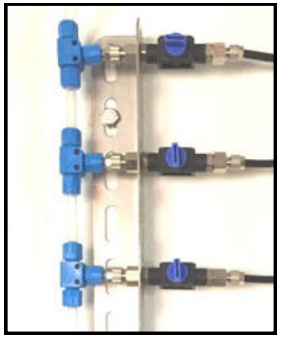



4125.0101

Easytronic II



EASYMIX

Volumetric batch,

directly from the silos

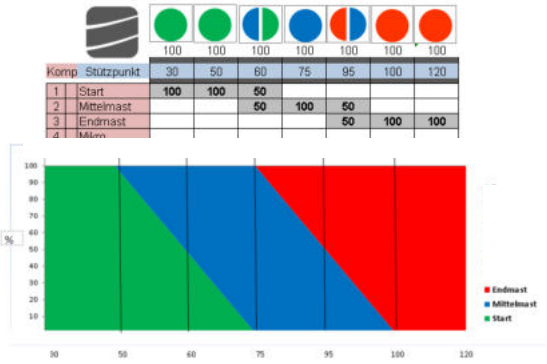

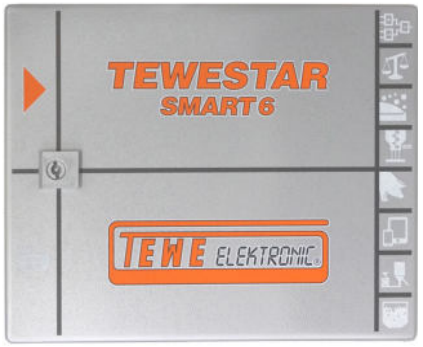

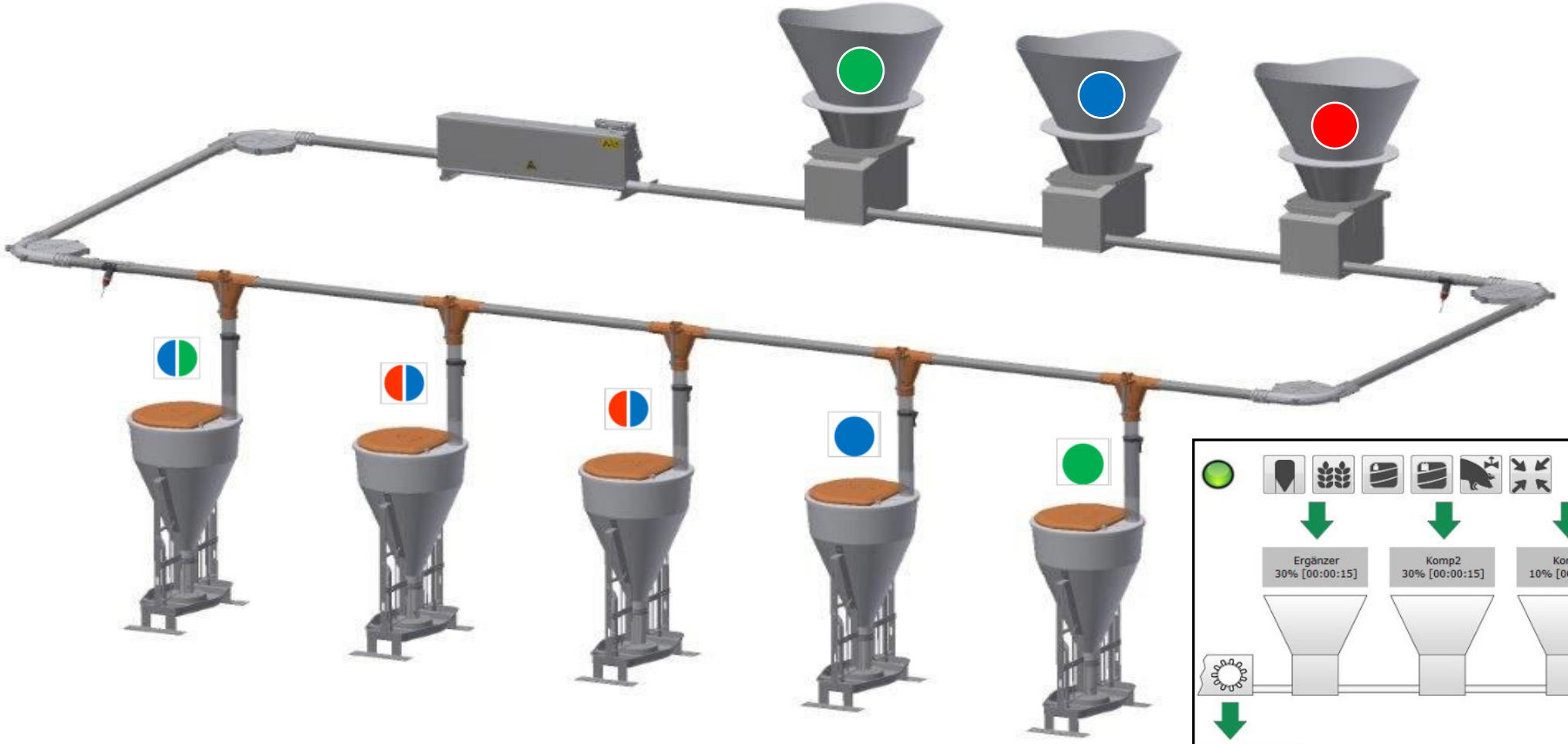





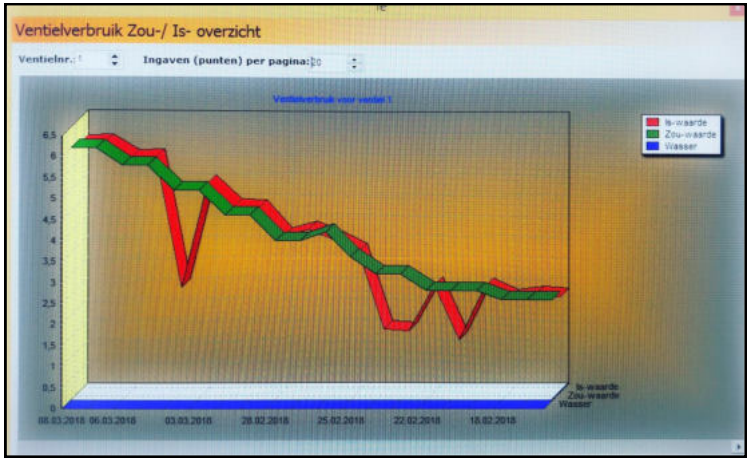



The individual multiphase feeding — directly or by use of dispensers and release system

Precision multiphase feeding for sows

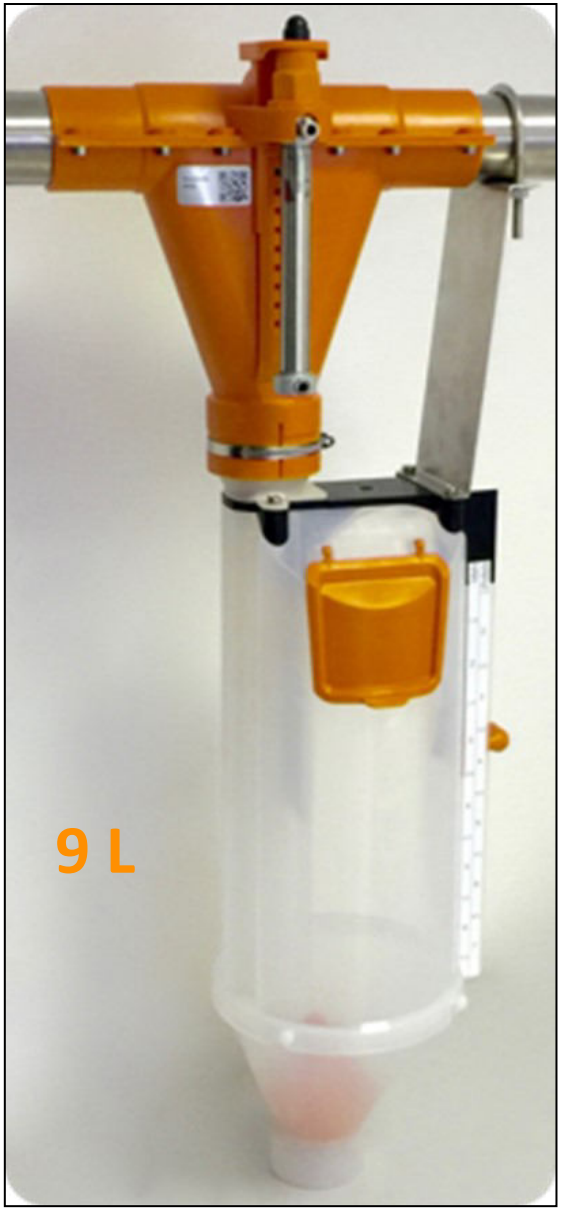

6 L



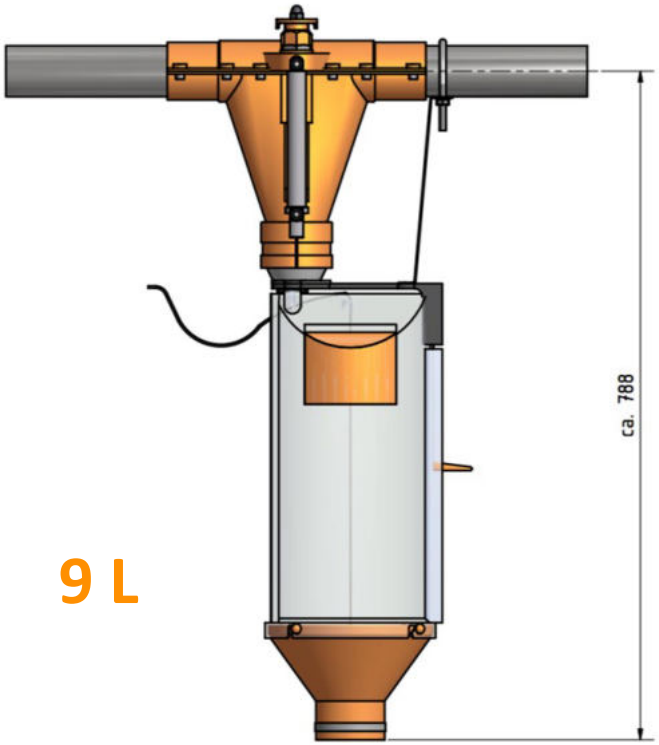

9 L

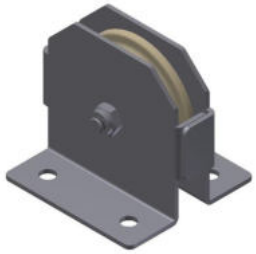

2983.0234



2983.0055



2983.0026



2983.0032



2983.0038

TEWESTAR Control of all feeding systems

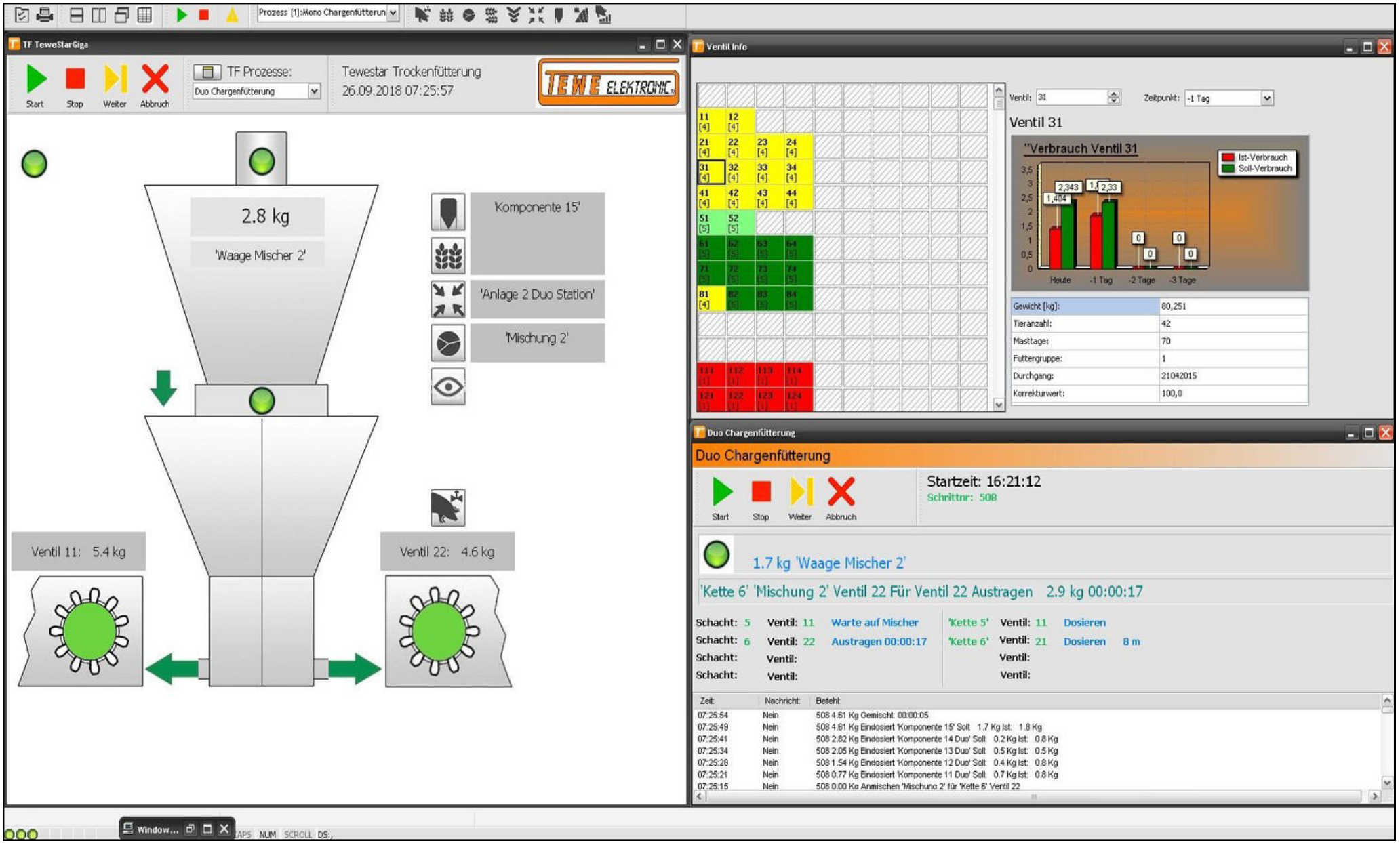

TEWESTAR HOME

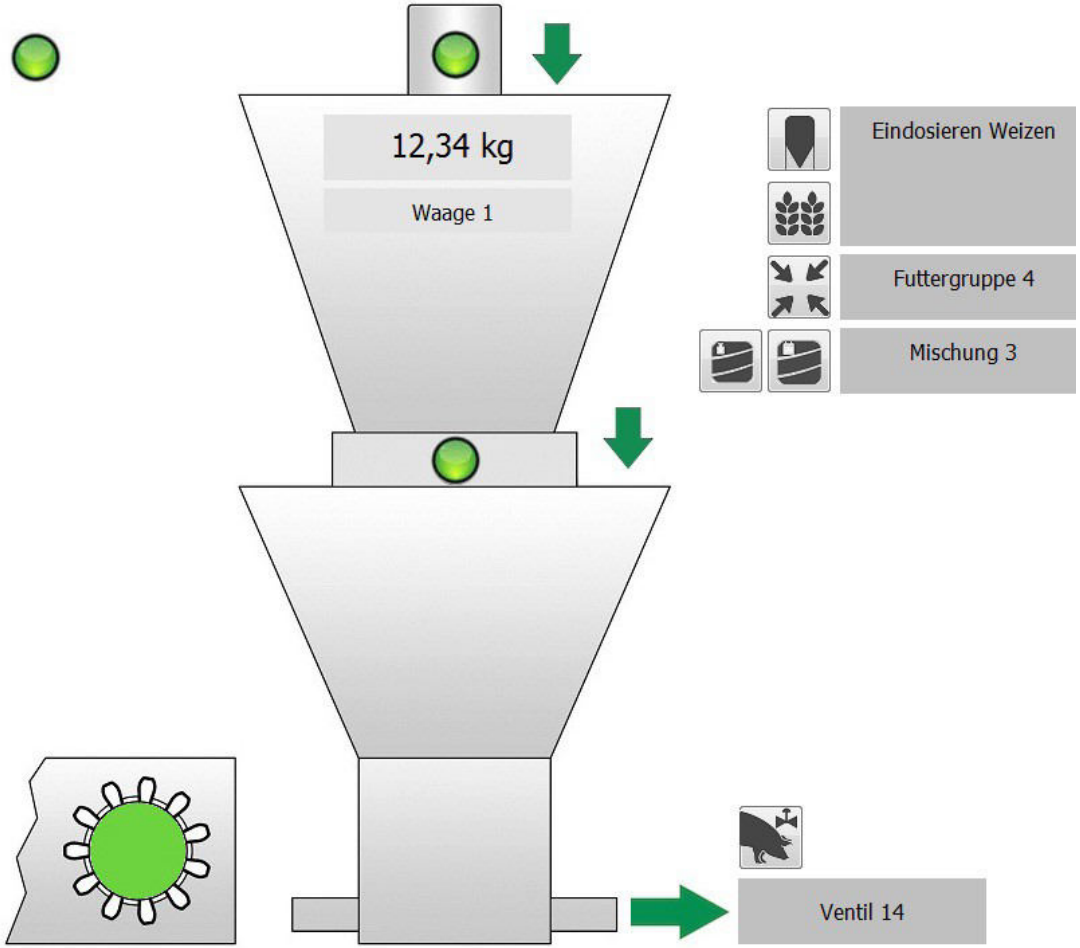

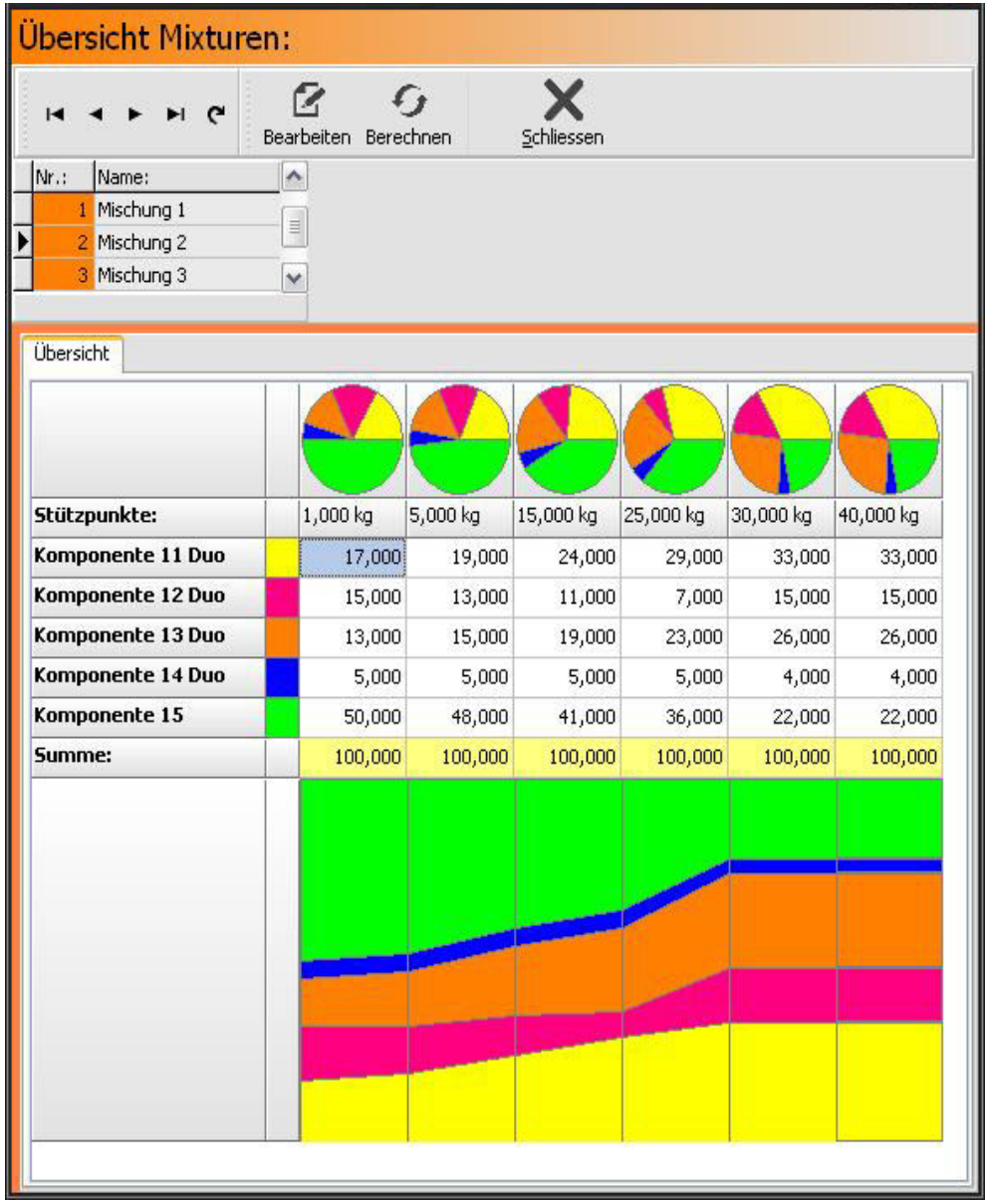

Multiphase feeding to be used for sorters

Precisely mixed recipes for each feeding group just in time.

- minimizes feed cost

- one feed circuit to supply different feeding groups

- flexible formulations

- overview of exact feed consuption of each group

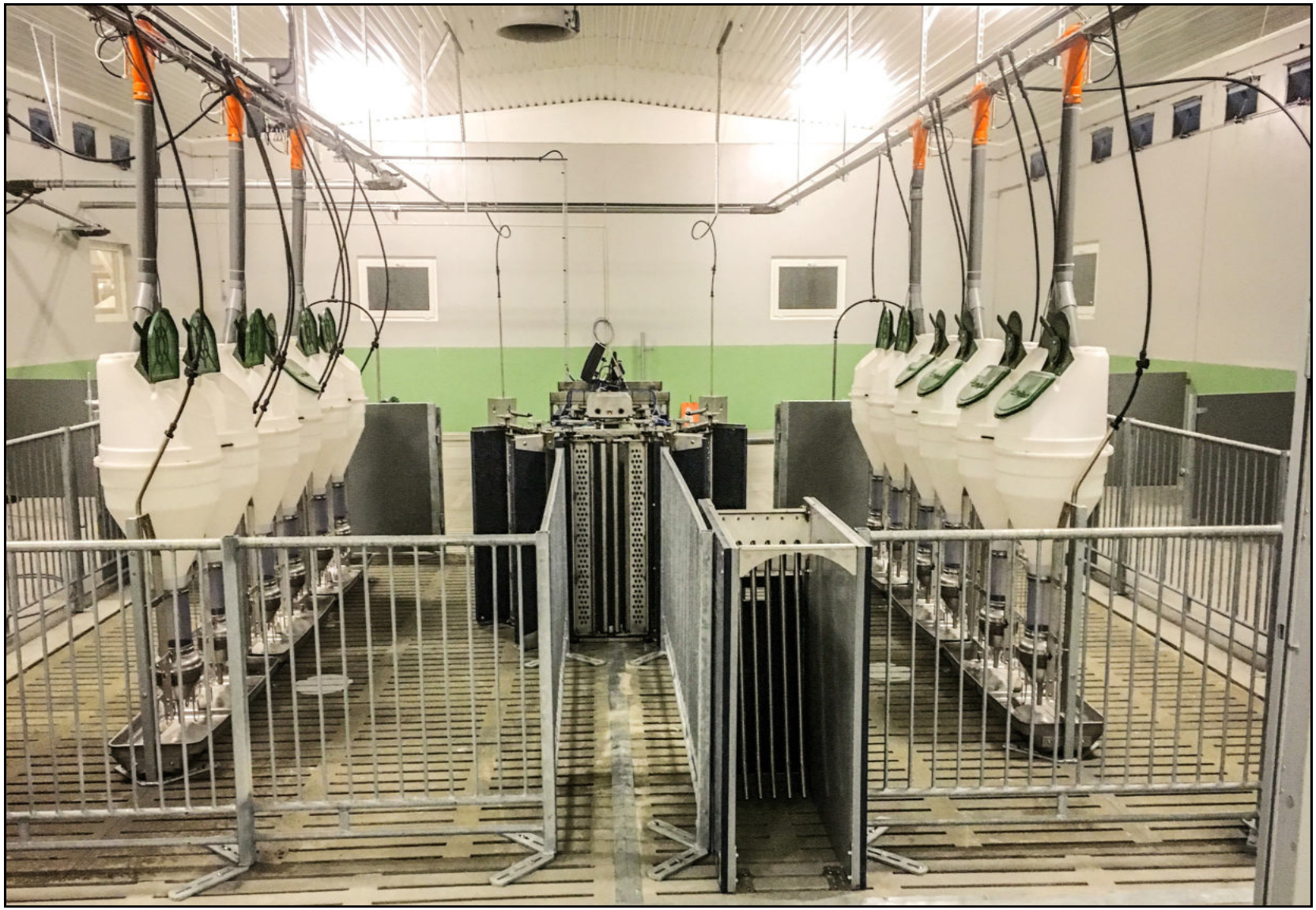

The **VelosConnector** sends the weight data from the sorter to the **Batchfeed system**. Based on those information the corresponding recipe is mixed for each feeding group.

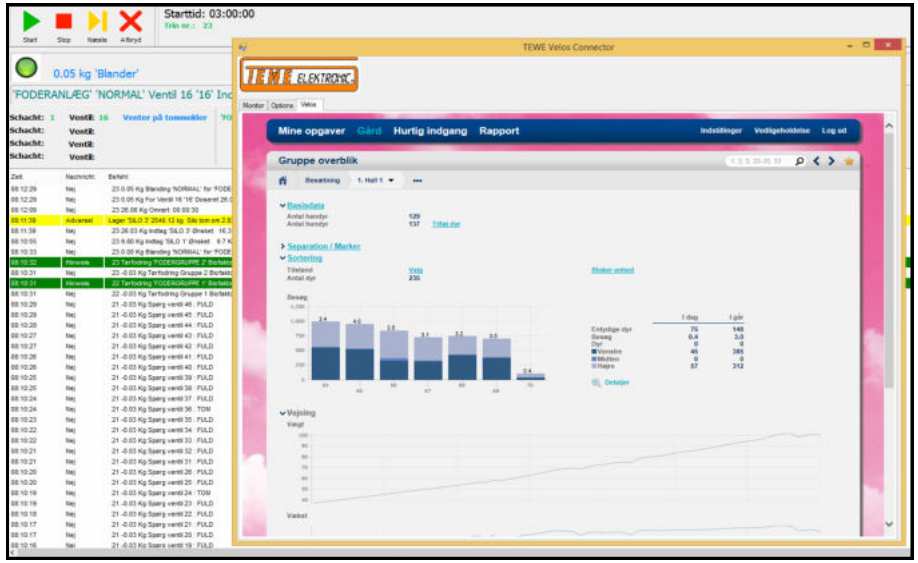

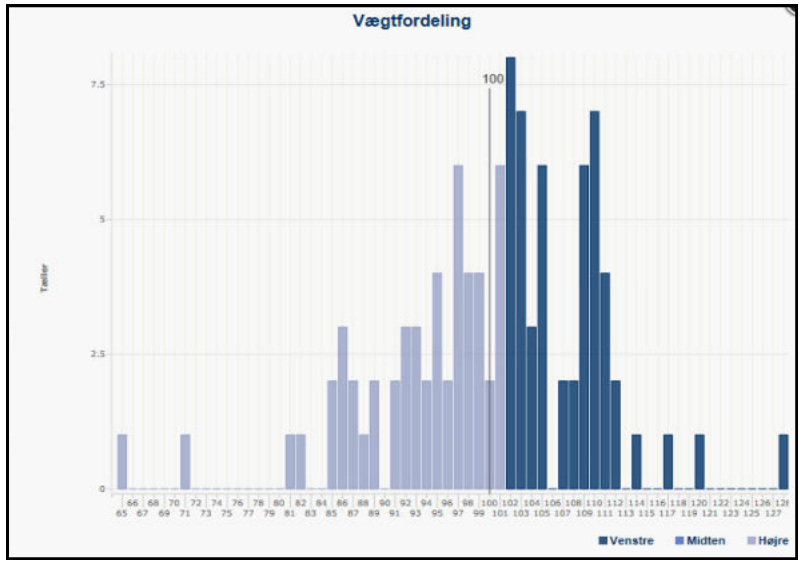

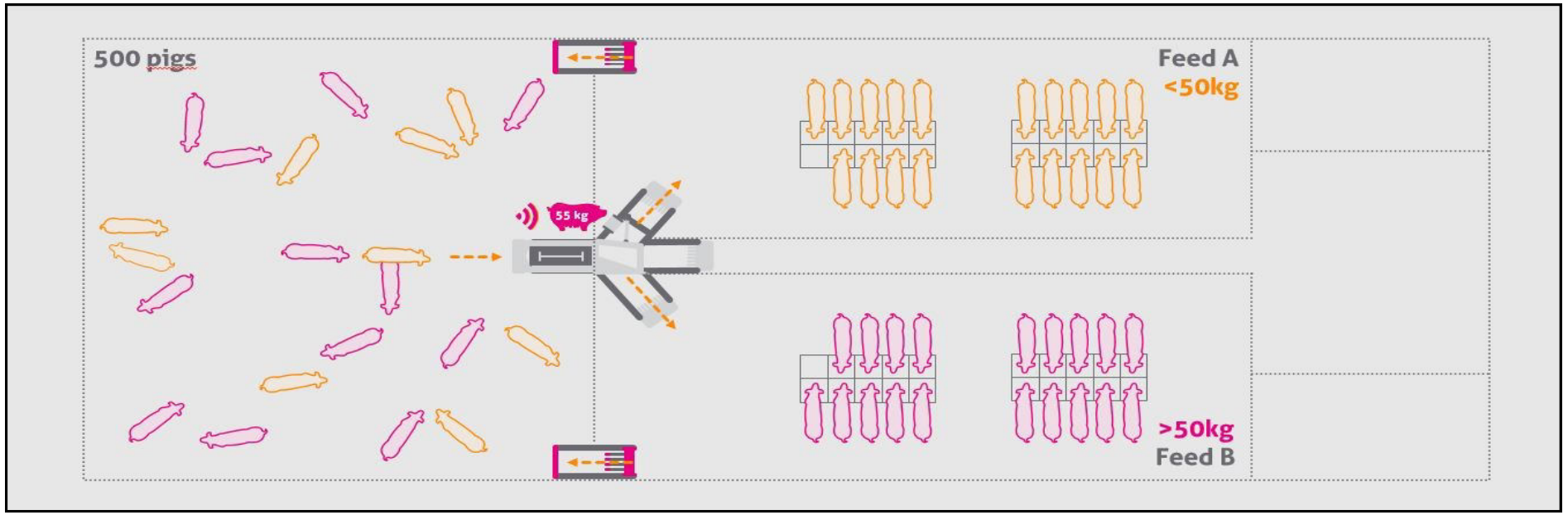

Farrowing compact feeder



- multiple feeding -
  for each sow individually
- the system runs
  automatically or manually
- feeds in accordance with
  the need of the animal
- considerable labor saving
- also suitable for use in the
  breeding stable

1 Compact feeder

2 V-scan

3 Feed control

4 Control unit

5 Standard display

6 Mobile display





ELECTRONIC SOW FEEDING

Benefit of individual electronic sow feeding in group housing:

- Sows are in excellent physical condition — more piglets in a litter
- Less feed wastage
- Individual feeding strategies easy to realize
- Prompt feedback if animals do not eat
- Substantial noise reduction—calmness and relaxed sows
- Automatic detection, marking and separation of sows in heat

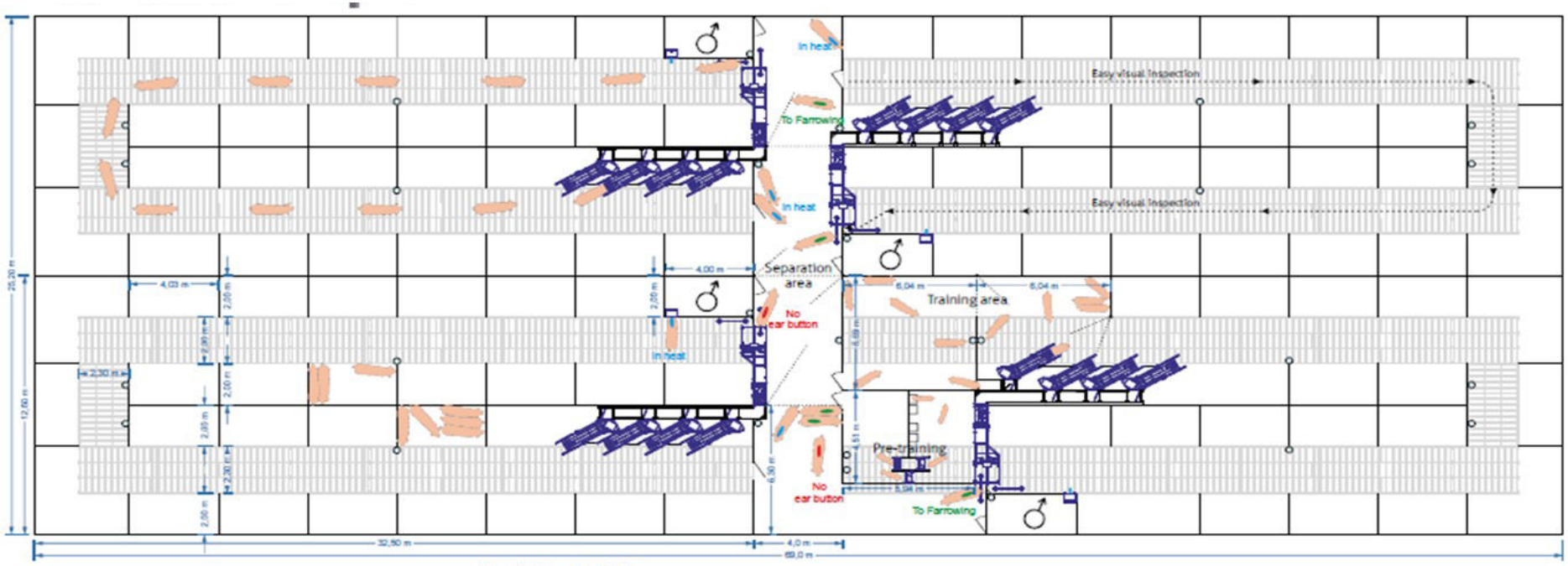

Total of 780 sows (3 groups of 198 sows and 1 group of 185 sows)





4125.0101 Easytronic II



6128.0003 Softstarter





2981.5761



2981.5761



6125.0011



Release station 2983.0073

Controller

The TEWESTAR sends the orders to the Easy-tronic by means of a CAN Bus.

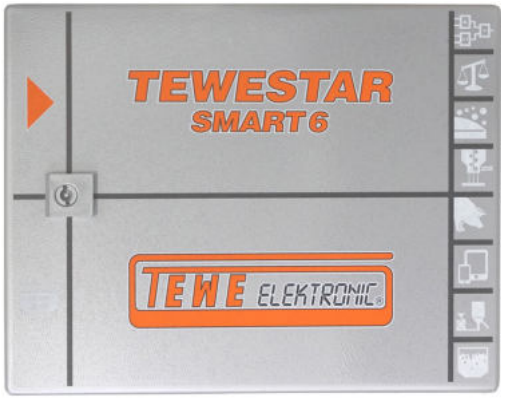



WEIGHT CONTROL

Just one system for the control of all silos





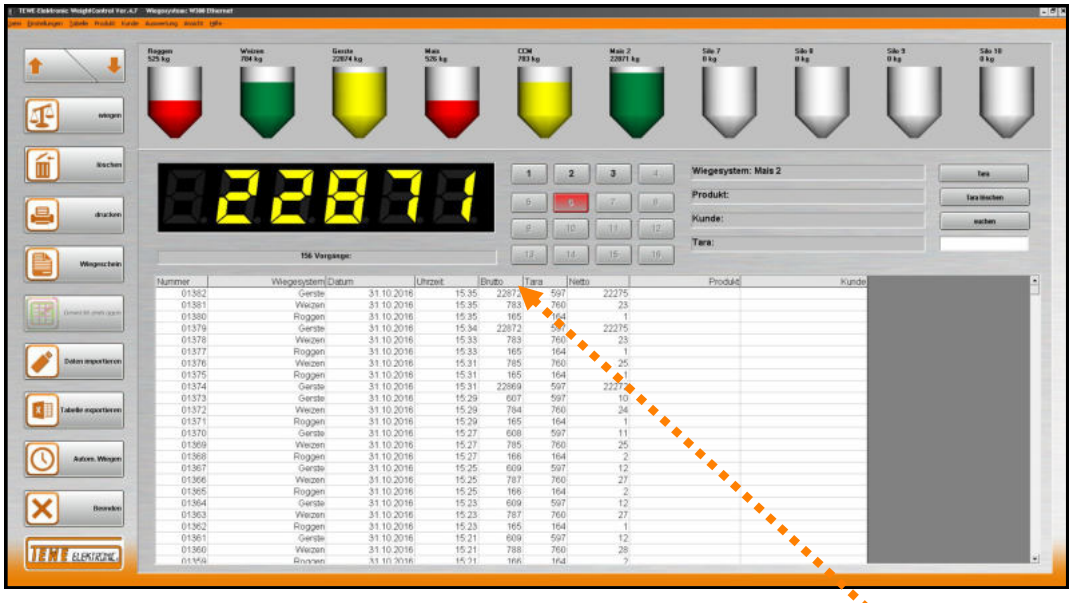

RS 232

RS 232 Box

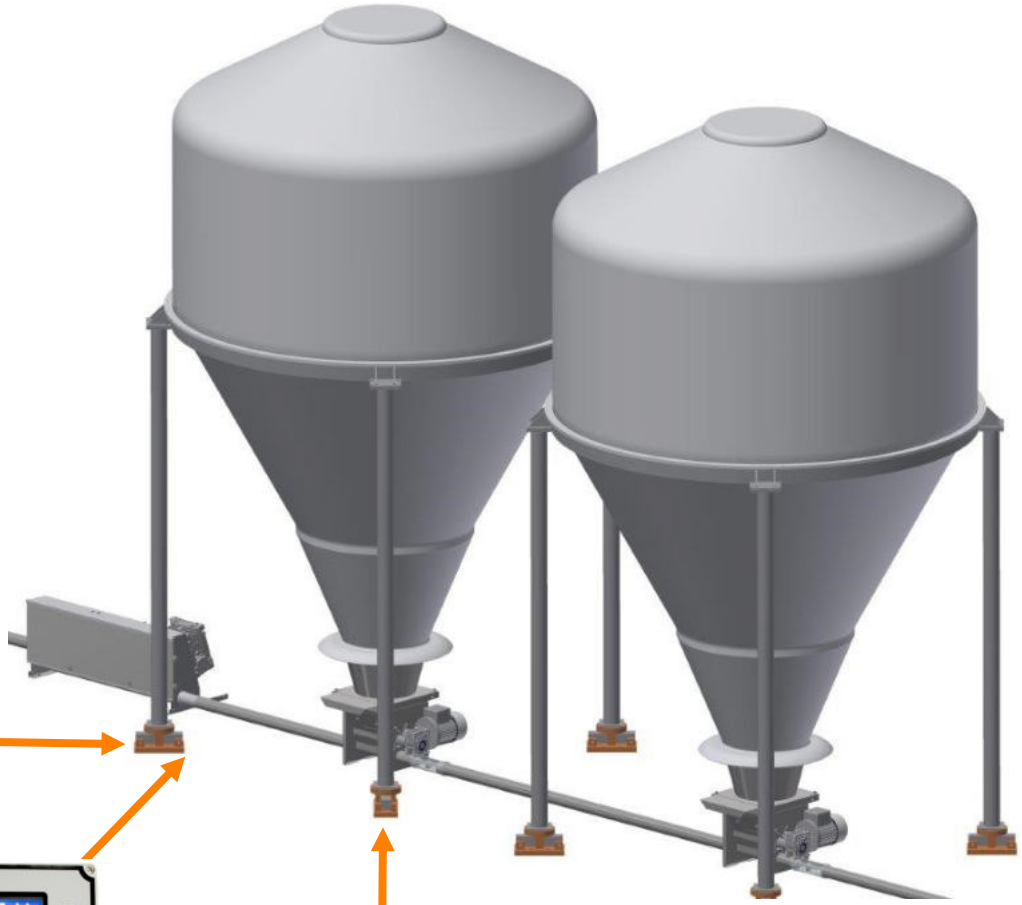





TCP/IP
CAN-BUS



CAN-BUS

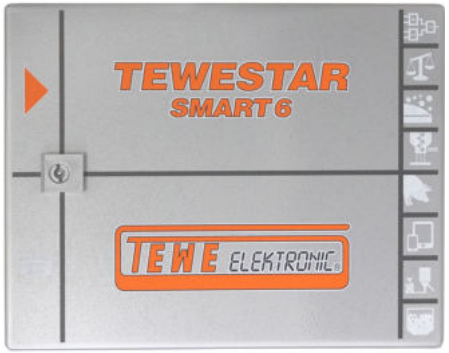

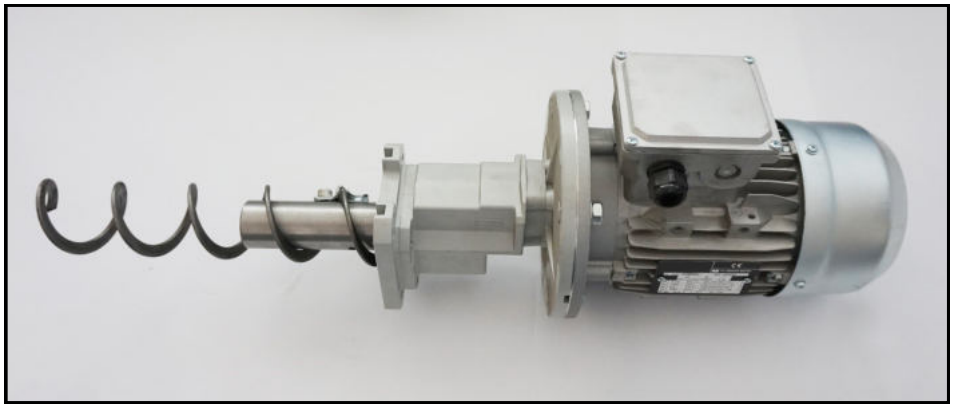



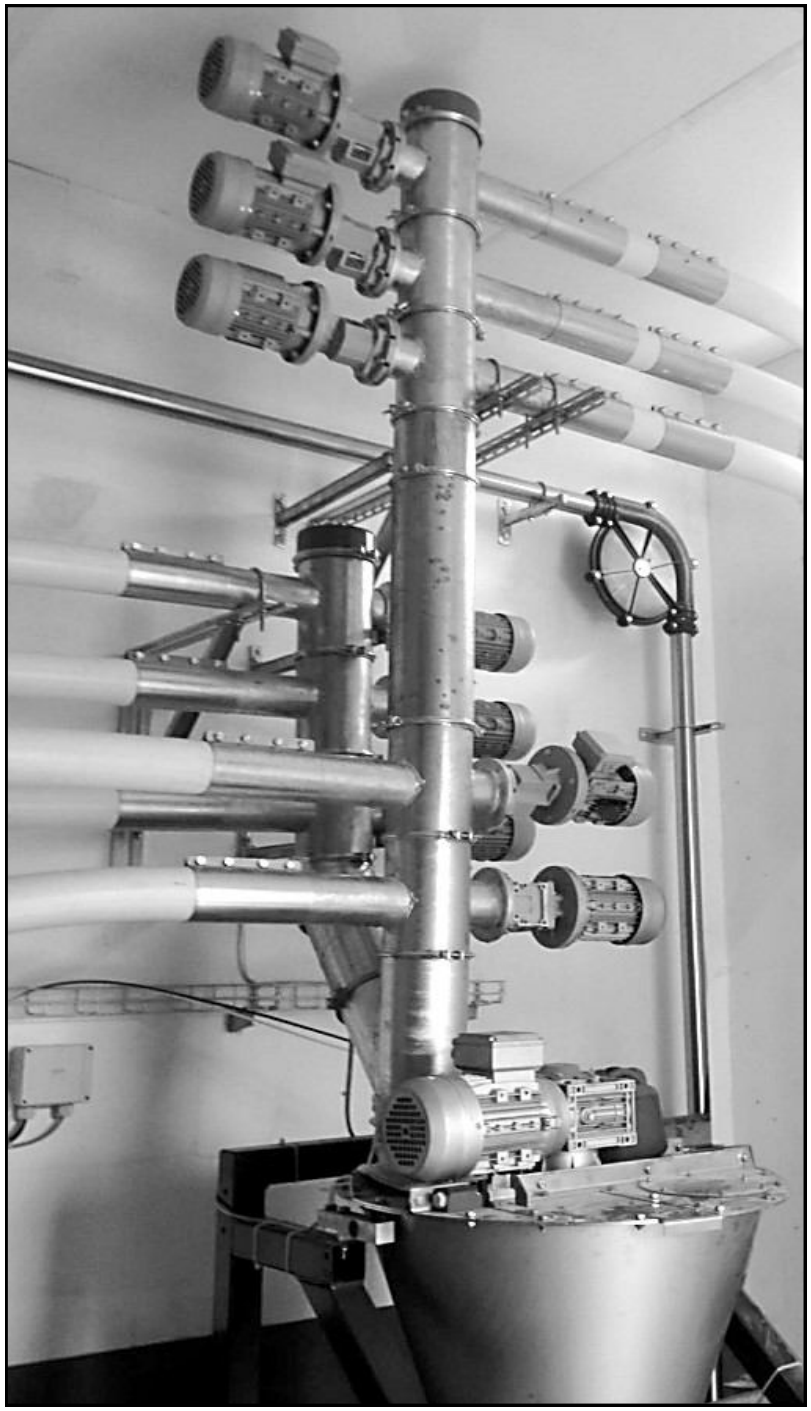

Spiral conveying system









60mm	1124.0101	8111.0022	8125.0021	1124.0004	8348.0022	7325.0011	1124.0202
75mm	1124.0102	8111.0034	8125.0023	1124.0005	8348.0023	1124.0391	1124.0205
90 mm	1124.0100	8111.0021	8125.0027	1124.0006	8348.0024	1124.0392	1124.0203
125 mm	1124.0103	8111.0035	8125.0030	1124.0007	8348.0025	1124.0393	1124.0204



1124.0367



1124.0369

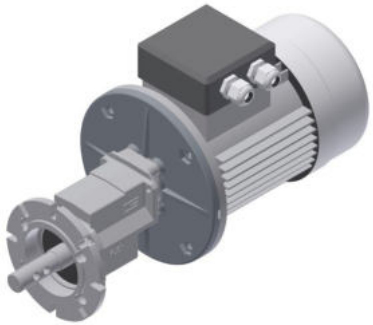

6004.0304	1,10 kW 356 rpm
6004.0303	0,75 kW 356 rpm
6004.0302	0,75 kW 177 rpm
6004.0301	0,75 kW 117 rpm



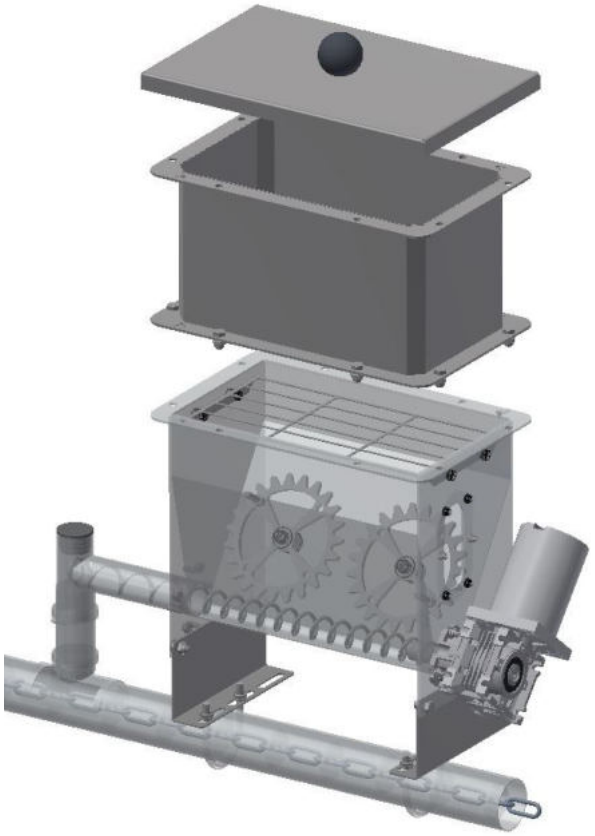





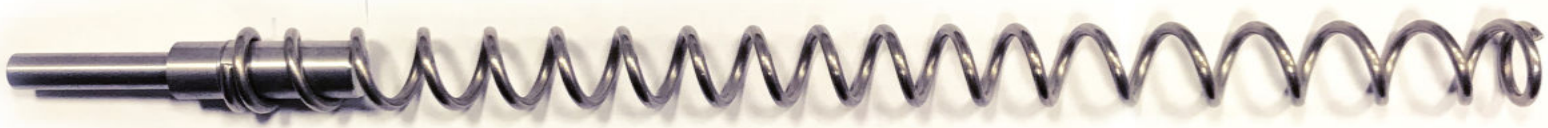

1125.0070

Microdoser

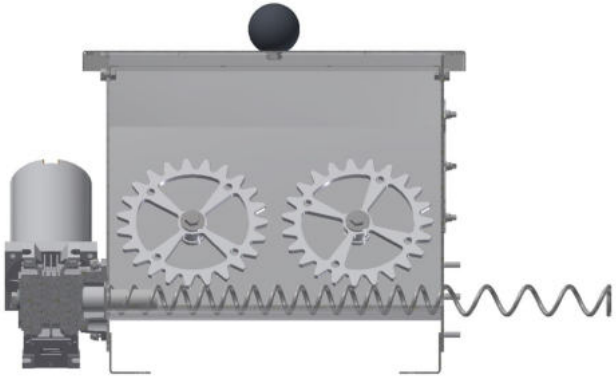

1125.0050



1125.0051



1125.0060



4513.0201



1125.0055



1125.0052



1125.0053



1125.0054

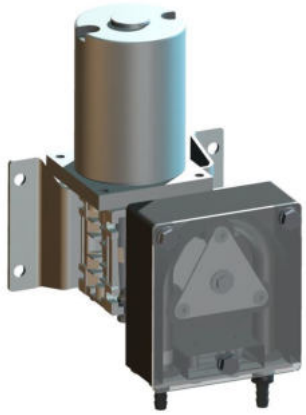

2416.0001



7212.0073
35 x 35 x 3 x 2000 mm



2984.0008

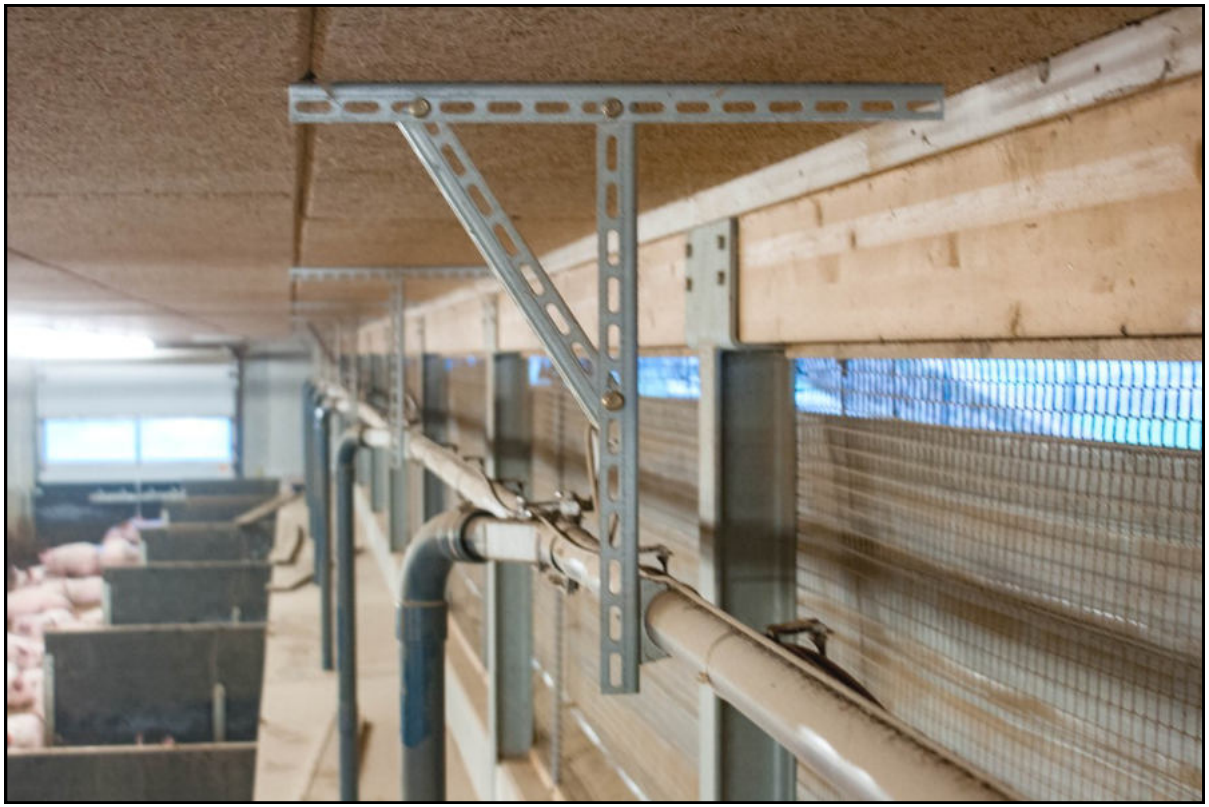

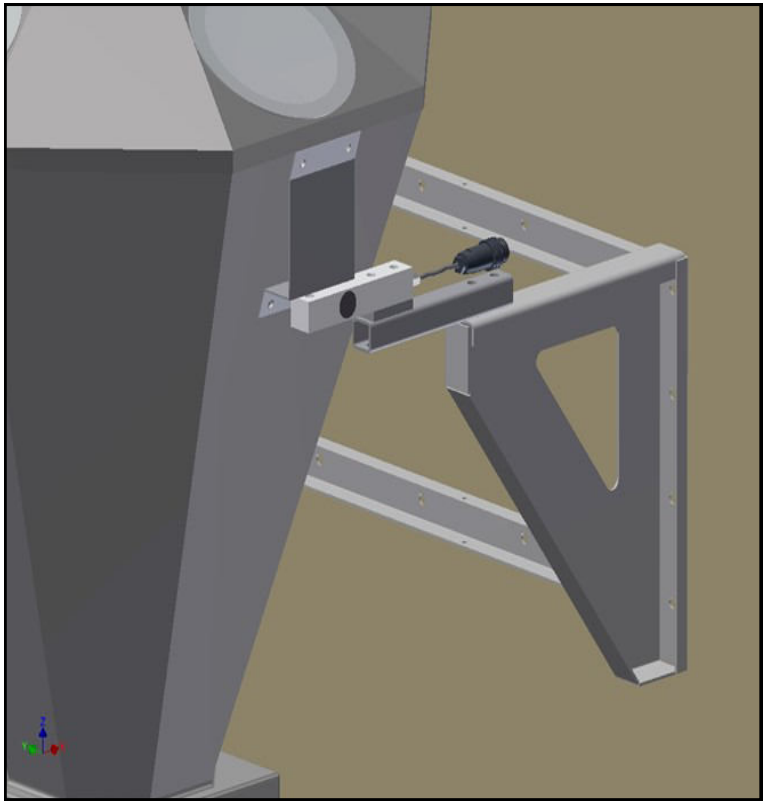

Fixing material and supports

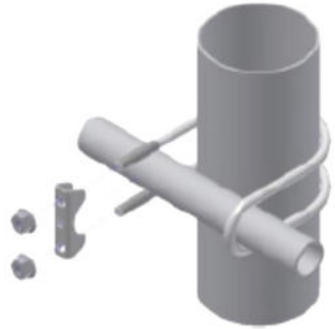

8351.0017 - M8, 1/2" x 80 mm

8351.0016 - M8, 3/4" x 80 mm

8351.0015 - M8, 1" x 80 mm



7212.0051 250 x 350mm

7212.0052 350 x 450mm

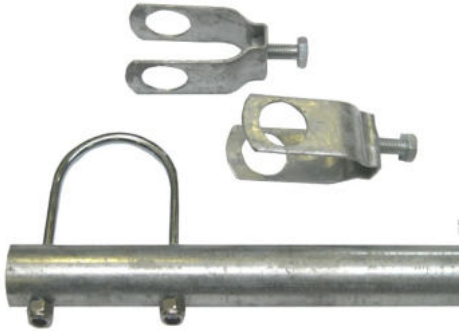

7212.0005 Ø 60 mm x 3/4" x L=1,30

7212.0046 Ø 60 mm x 3/4" x L=1,50

7212.0006 Ø 60 mm x 1" x L=1,30

7212.0047 Ø 60 mm x 1" x L=1,50



8348.0020 Ø 50 mm

8348.0021 Ø 60 mm

8348.0022 Ø 70 mm

8348.0023 Ø 83 mm

8348.0024 Ø 102 mm

8348.0025 Ø 138 mm

TEWE Elektronic GmbH

Karl-Benz-Straße 17 · 48691 Vreden/Germany
Phone: +49 (0) 25 64 / 93 55 0
Fax: +49 (0) 25 64 / 33 71 5
info@tewe.com
www.tewe.com

QUALITY MADE IN GERMANY

Quality Management ISO 9001
www.dekra-seal.com
DEKRA certified

Version 1.8 10/09/2023